HEBER CITY CORPORATION
75 North Main Street
Heber City, UT 84032
Planning Commission Meeting

June 11, 2024

6:00 p.m. – Regular Meeting

-Time and Order of Items are approximate and may be changed as Time Permits-

Public notice is hereby given that the monthly meeting of the Heber City Planning Commission will be in the Heber City Office Building, 75 North Main, South door, in the Council Chambers upstairs.

1. Regular Meeting:

I. Call to Order

II. Roll Call

III. Pledge of Allegiance: By Invitation

IV. Prayer or Thought: By Invitation

V. Recuse for Conflict of Interest

2. Consent Agenda:

I. 05.28.2024 Draft Minutes for Approval

3. Action Items:

I. Old Mill Village - Site Plan (Planner Larsen - Engineer Horrocks Engineering)

4. Work Meeting: N/A

5. Administrative Items:

I. City Council Communication Item

6. Adjournment:

Ordinance 2006-05 allows Commission Members to participate in meetings via telecommunications media.

In accordance with the Americans with Disabilities Act, those needing special accommodations during this meeting or who are non-English speaking should contact Meshelle Kijanen at the Heber City Offices at 435.657.7898 at least eight hours prior to the meeting.

Posted on 06.06.2024, in the Heber City Municipal Building located at 75 North Main, the Heber City Website at www.heberut.gov, and on the Utah Public Notice Website at http://pmn.utah.gov. Notice provided to the Wasatch Wave.

HEBER CITY CORPORATION
75 North Main Street
Heber City, UT 84032
Heber City Council Meeting
May 28, 2024

DRAFT Minutes

6:00 p.m. – Regular Meeting

1. Regular Meeting:

I. Call to Order

Vice Chairman Dave Richards called the Planning Commission Meeting to order at 6:00 p.m. and welcomed everyone present.

II. Roll Call

Planning Commission Present:	Vice-Chairman Dave Richards Commissioner Phil Jordan Commissioner Josh Knight Commissioner Tori Broughton Commissioner Darek Slagowski Commissioner Greg Royall
Planning Commission Absent:	Chairman Dennis Gunn Commissioner Robert Wilson
Staff Present:	Planner Jacob Roberts Planning Office Admin Meshelle Kijanen Senior City Engineer Ross Hansen
Staff Participating Remotely:	Planning Consultant GCGarcia Anthon Beales
Also Present:	N/A
Also Attending Remotely:	Jeff Peterson and Scott B.

III. Pledge of Allegiance: By Invitation

Commissioner Joshua Knight led the recitation of the Pledge of Allegiance.

IV. Prayer or Thought: By Invitation

N/A

V. Recuse for Conflict of Interest

N/A

2. Consent Agenda:

I. 04.09.2024 & 04.23.2024 Minutes for Approval

Motion: Commissioner Knight moved to approve the items on the Consent Agenda. Commissioner Royall made the second.

Discussion: N/A

Voting Yes: Planning Commission Vice-Chair Richards, Commissioner Slagowski, Commissioner Knight, Commissioner Jordan, Commissioner Broughton, Commissioner Royall.

Voting No: None.

The Motion Passed 6-0.

3. Action Items:

I. Airport T-Hangar Site Plan, located at 620 W. Airport Road (Planner Woodbury/Engineer Hansen)

Planner Woodbury led discussion on this item. She reported that Staff had reviewed this application and explained it was a 17-unit condominium complex located on 1.45 acres of the airport property. She stated the dimensions were 60 feet wide and 464 feet long and clarified they met the lighting, parking, and setback requirements and so Staff recommended approval of the site plan as long as the proposal was met all findings and conditions as identified by Staff, the Planning Commission, and the FAA. She also shared blueprint images of the overall site and the individual units, and shared images of the planned materials and colors.

Commissioner Josh Knight asked if they had a schedule for the build out. Jeff Peterson identified himself as the developer and the lease holder for the building and said they hoped to submit their building plans and break ground in July, so they could get everything out of the way before the first snowfall of the year. He explained the building took six months to manufacture, so once they had a building permit they would place the order for the building and he hoped they would receive the building by October. In all, he anticipated being fully completed in March of the following year.

Commissioner Knight asked how tall the other hangars were and Mr. Peterson replied they were about 24 to 26 feet tall, and he added the proposed hangar was only 23 feet tall.

Commissioner Phil Jordan asked how close the nearest residential property was located to the proposed building, and clarified he was asking about this to determine if there would be a lighting impact. Mr. Peterson said the hangar faced northeast and there was nothing adjacent to it. Mr. Peterson said the closest residential unit was across the field and he did not except it would be impacted by lighting. Mr. Peterson estimated it was at least 400 or

500 feet away. Commissioner Jordan commented they needed to ensure they were Dark Sky compliant.

Senior Staff Engineer Hansen asked Mr. Peterson to explain the issue they were having and to tell the Planning Commission how they wanted to proceed. Engineer Hansen pointed out this building had a lot of walls in between the t-hangars, and those t-hangars were individually owned. He said the City and the leasee had reached an agreement which stated that the leasee desired to create a hangar for privately owned aircrafts with individual hangar units platted as part of a lease-hold condominium, as the term was definition by the Utah Condominum Ownership Pact. He reported that they had met with City attorneys the previous week to discuss this issue, and the attorneys had determined that they needed to have a condominium plat. Engineer Hansen stated Mr. Peterson had been notified about this issue and he had since been working with Planner Baron about how to make an appropriate decision about how to move forward.

Mr. Peterson said they had begun working on this project back in 2018.

The Commissioners could not hear Mr. Peterson due to a technical issue and he momentarily recused himself to solve the issue.

Engineer Hansen summarized that the attorneys office had directed staff to ask the applicant to submit a condominium plat, which had a different approval process than the site plan approval. Engineer Hansen said Mr. Peterson hoped to re-negotiate the agreement with the City to remove the words “condominium plat as required” as an alternative to going through that other process.

Mr. Peterson was able to re-join the meeting. He reiterated at when they had begun this project in 2018, they had negotiated for the initial intent of the plan. He said they had an agreement with the City and were about to start the draft of the lease when the City began the Airport Layout Plan, which essentially stopped all development. He said they had waited until everything was resolved for the ALP before beginning to renegotiate the lease, and he explained why they had kept the language about condominiums in the lease at that point.

Mr. Peterson then reported he had met with the Fire Marshal to make sure there were no fire safety concerns. Although the Fire Marshal had not raised concerns, the building inspector had found that the building needed fire walls if it was going to be designated as a condominium. Mr. Peterson thought the best way to move forward was to have one entity or individual own the building and then individuals could own their specific unit, so it would not functionally be condominium. He reported that he had met with his attorneys, who had advised him it should not be an issue to remove the language of “condominium” from the lease. Mr. Peterson summarized it would essentially be one building with one sewer line and one gas meter, so it would not be a condominium.

Commissioner Jordan asked if the units would be leased and Mr. Peterson said the units would be bought and sold. Mr. Peterson said the building was on City-leased land that would not be bought or sold, although the units would be sold. Commissioner Jordan said they could execute a 75-year lease which was comparable to home ownership although the lease document would need to stipulate that the land continued to be leased by the

City. Mr. Peterson explained the lease hold interest was 40 years with a 40 year extension, so it was essentially a 80 year lease. He reiterated they would not sell individual units, but buying into the project and this would give them a hangar to use. He added they did not have deed, but rather a record of survey, and noted the other hangars on the property did not have deeds either.

Engineer Hansen mentioned that there had been previous conversation about the idea of each hangar having a tax ID and tax notice sent to the owner, and he asked if that was still the intention. Mr. Peterson said there would be one tax notice. Mr. Peterson elaborated that when they got the water bill or other utilities, they would parcel it out to the shareholders.

Commissioner Tori Broughtonasked if the members could “sub-member” their stock out to someone else, or if they would have to release their share if they wanted to sell. Mr. Peterson explained that members could transfer their stocks to someone else. He also explained that all members would have to sign a compliance agreement in addition to the lease. Mr. Peterson said this would ensure everyone was aware of the rules before they purchased a share.

Commissioner Jordan asked about allowed permitted uses reference to “repair.” He asked if the fire department had reviewed that and were okay with the language, and also asked if there were any limits as to what repairs were allowed. Mr. Peterson said that the fire department had reviewed it and they were okay with doing epairs, although they could not do any welding or fabrication on the site. Mr. Peterson said what was permitted in terms of repairs was codified in their lease agreements.

Commissioner Jordan addressed the Planning Commission and summarized they could continue this until they heard the finding. He also said the plans that had been submitted seemed to be compliant, as far as he understood the legal position. Vice-Chairman Dave Richards agreed with Commissioner Jordan and said one of the conditions in the motion needed to be that the City Attorney and the City reach an agreement, since the scope of this went beyond the Planning Commission. Commissioner Jordan said making an agreement with the City Attorney was an integral component of this proposal. Engineer Hansen said as far as the Planning Commission was concerned this was essentially a site plan approval, and so far this application had Staff approval as long as they could come to a legal agreement. Mr. Peterson said all of the conditions that Staff had found so far made sense to him and stated he was willing to work with all of those items. Mr. Peterson also expressed appreciation for Engineer Hansen for all the work he had put into this project so far.

Property manager that would enforce regulations for all of th owners and Mr. Peterson replied there would be, and said there would be regular building inspections as well. Mr. Peterson added their lease could be voided if they failed to maintain the property in accordance with City standards.

Motion: Commissioner Jordan moved to Airport T-Hangar Site Plan,located at 620 W. Airport Road, as presented with the findings and conditions as identified by Staff. In addition, there was a provision that the project only move forward if the conditions of the City Attorney were met. Commissioner Broughton made the second.

Discussion: Vice-Chairman Richards asked if there should be language about the "condominum" issue in the motion. Commissioner Jordan said he wanted to avoid any discussion of that in order to leave it under the City Attorney's jurisdiction.

Voting Yes: Planning Commission Vice-Chair Richards, Commissioner Slagowski, Commissioner Knight, Commissioner Jordan, Commissioner Broughton, Commissioner Royall.

Voting No: None.

The Motion Passed 6-0. Vice-Chairman Richards wished Mr. Peterson best of luck as he moved forward with the project. Mr. Peterson thanked the Commission as well and expressed he looked forward to continuing the project.

4. Work Meeting: N/A

5. Administrative Items: N/A

6. Adjournment:

Motion: Commissioner Knight moved to adjourn. Commissioner Royall made the second.

Discussion: N/A

Voting Yes: Planning Commission Vice-Chair Richards, Commissioner Slagowski, Commissioner Knight, Commissioner Jordan, Commissioner Broughton, Commissioner Royall.
Voting No: None.
The Motion Passed 6-0.

_____
Meshelle Kijanen, Administrative Assisant

DRAFT

Planning Commission Staff Report

MEETING DATE:	6/11/2024
SUBJECT:	Old Mill Village - Site Plan (Planner Larsen - Engineer Horrocks Engineering)
RESPONSIBLE:	Aubrey Larsen
DEPARTMENT:	Planning
STRATEGIC RELEVANCE:	Community Development

SUMMARY

This application is for an amendment to the 15.09 acre Old Mill Village Subdivision, which was previously approved in 2022. The amendment addresses two equal-sized lots covering 1.96 acres along the east edge of the highway. Both lots were previously approved as a commercial subdivision. The application proposes that a 12- unit mixed use commercial development be permitted as an amendment to the approved subdivision plan.

RECOMMENDATION

Staff recommends that the Planning Commission approve the Site Plan for Old Mill Village located at 2191 South Sawmill Boulevard, subject to findings and conditions.

BACKGROUND

The application was reviewed at the DRM on February 21, 2024, at which time it was determined that the project met general requirements, although several issues were flagged by staff for revisions and additional clarification. The applicant has since provided additional information to address issues and provide clarification.

DISCUSSION

Parking: The proposed project includes 83 parking spaces planned for commercial uses. There are 24 parking spaces in the garages for residential uses (two for each residential unit above). The project has a total of 107 parking spaces. The applicant indicates that since specific commercial uses are not presently known, the number of parking spaces required for each specific use will need to be reviewed during the building permit review process to ensure the use and available parking are aligned. It is anticipated that the project will have enough parking spaces, assuming there will be a

mix of office, retail and restaurant uses in the proposed commercial spaces.

Density: The applicant indicates that the approved and platted apartments and townhomes alone exceed the 8.86 ERU mentioned in the Civic Review report, and that the proposed amendment increases the ERU's per acre by approximately one ERU per acre. The applicant indicates that the apartments are less than 1,500 sf and have 2 bathrooms, which is equal to 0.75 ERU. The townhomes have 2.5 bathrooms, which equals 1.00 ERU. The residential units above the commercial are greater than 1,500 sf, which also equal 1.00 ERU.

Affordable Housing Plan: According to the applicant, the Old Mill Village development has 17 deed restricted townhomes and 8 deed restricted apartment units for affordable housing. These affordable housing units make up 23 ERU's or 13.7% of the amended project, thereby 10% affordable housing requirement for the entire project.

Building Elevations: Updated building elevations have been provided, clarifying that the materials meet code requirements.

FISCAL IMPACT

CONCLUSION

The Old Mill Village project was prepared in response to a Master Development Agreement (MDA) approved by the City Council on March 2, 2021.

Based on the review of the original application and subsequent revisions, staff recommends that the Planning Commission approve the Site Plan for Old Mill Village located at 2191 South Sawmill Boulevard, subject to the following findings and conditions:

Findings:

1. The application is generally consistent with the General Plan.
2. The application is generally consistent with the Municipal Zoning Code and the MDA.

Conditions:

1. Provide verification that the density/ERUs meet the approved MDA requirements , for review and approval by staff.
2. Provide an updated copy of the Affordable Housing Plan for review and approval by staff, verifying that the changes proposed are aligned with the agreed upon conditions.
3. All requirements of the City Engineer and Fire Department shall be met.
4. All other Code Requirements shall be met.

5. Any other conditions or changes as articulated by the Planning Commission.

ALTERNATIVES

Staff Recommended Option - Approval

I move to **approve** the item as presented, with the findings and conditions as presented in the conclusion above.

Alterntive 2 - Continuance

I move to **continue** the item to another meeting on , with direction to the applicant and/or Staff on information and / or changes needed to render a decision, as follows:

Alternative 3 - DENIAL

I move to **deny** the item with the following findings.

POTENTIAL MOTIONS

ACCOUNTABILITY

Department: Planning
Staff member: Mark Vlasic, Planning Consultant

EXHIBITS

1. 1-OMV COMMERCIAL AMENDED FINAL APPLICATION PLAN_7 MAY 2024
2. 2-Building Renderings_Revised_4-4-2024
3. 3-OMV Commerical Amended - Site Lighting_Updated 03-08-2024

OLD MILL VILLAGE COMMERCIAL SUBDIVISION
PLAT AMENDMENT AND FINAL SITE PLAN APPLICATION

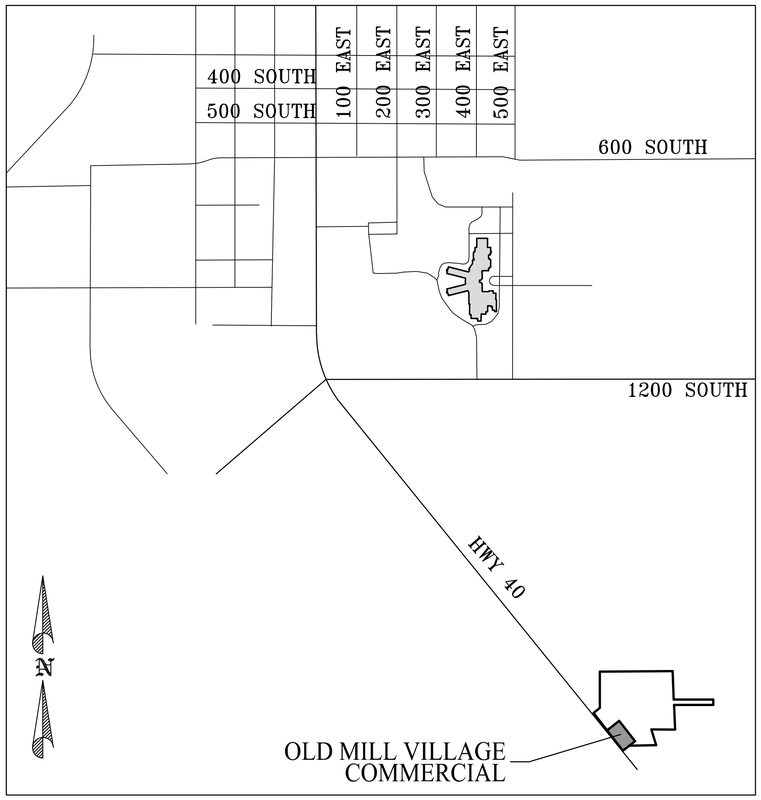

VICINITY MAP

SHEET INDEX

C1. EXISTING CONDITIONS AND DEMOLITION PLAN
C2. AMENDED SITE PLAN
C3. OLD MILL VILLAGE COMMERCIAL SUBDIVISION AMENDED 2 PLATS
C4. GRADING PLAN
C5. PAVING AND GRADING DETAILS
C6. OVERALL UTILITY PLAN
C7. SEWER PLAN
C8. SEWER CONSTRUCTION DETAILS
C9. WATER PLAN
C10. PRESSURIZED IRRIGATION PLAN
C11. WATER AND PI DETAILS
C12. STORM DRAIN PLAN AND PROFILE
C13. STORM DRAIN DETAILS
C14. STORM WATER POLLUTION PREVENTION PLAN

LANDSCAPE PLANS

L1. LANDSCAPE PLAN
L2. LANDSCAPE DETAILS
L3. IRRIGATION PLAN
L4. IRRIGATION DETAILS 1 OF 2
L5. IRRIGATION DETAILS 2 OF 2

OLD MILL VILLAGE COMMERCIAL SUBDIVISION - FINAL APPLICATION - 7 MAY 2024

STATE OF UTAH
PAUL D. BERG
PROFESSIONAL ENGINEER
7 May 2024

HEBER CITY ENGINEER ACCEPTANCE

RUSSELL FUNK DATE

JURA HOLDINGS
OLD MILL VILLAGE

COVER SHEET

BERG ENGINEERING
380 E Main St. Suite 204
Midway, Ut 84049
ph 435.657.9749

DESIGN BY: PDB	DATE: 7 MAY 2024	SHEET
DRAWN BY: JNE	REV:	0

path: X:\Water\Bula - Highway 40\Commercial Subdivision 2023\Final\
file name: COS_COVER.dwg | plot date: May 08, 2024 | plotted by: STACEY-PC

BLUE STAKE NOTE:
- LOCATION OF EXISTING UTILITIES SHOWN ON PLAN ARE APPROXIMATE AND MAY BE INCOMPLETE. CONTRACTOR IS RESPONSIBLE FOR BLUE STAKING OF UTILITIES.

NOTES:
- CONTRACTOR RESPONSIBLE TO REVIEW EXISTING SITE CONDITIONS
- CONTRACTOR TO REMOVE ALL TRASH, DEBRIS AND OTHER MATERIALS FROM PREVIOUS CONSTRUCTION STAGING ON THE PROPERTY

LEGEND

EX8"SS	EXISTING SEWER
EXW	EXISTING WATER
EXOHP	EXISTING OVERHEAD POWER
TEL	EXISTING PHONE LINES
EXPI	EXISTING PRESSURIZED IRRIGATION
EXGAS	EXISTING GAS LINE
EXSD	EXISTING STORM DRAIN
X	EXISTING FENCE
	PROPERTY BOUNDARY
EXFH	EXISTING FIRE HYDRANTS

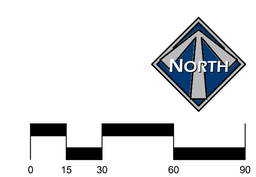

SCALE: 1"=30'
Scale 1" = 60' for 11x17

STATE OF UTAH
PAUL D. BERG
PROFESSIONAL ENGINEER
7 May 2024

HEBER CITY ENGINEER ACCEPTANCE

RUSSELL FUNK | DATE

JURA HOLDINGS
OLD MILL VILLAGE
EXISTING CONDITIONS AND DEMOLITION PLAN

BERG ENGINEERING
380 E Main St. Suite 204
Midway, Ut 84049
ph 435.657.9749

DESIGN BY: PDB DRAWN BY: JNE	DATE: 7 MAY 2024 REV:	SHEET C1

path: X:\Heber\Blue - Highway 40\Commercial Subdivision_2023\Final\
file name: C01_EXISTING CONDITIONS PLAN.dwg | plot date: May 13, 2024 | plotted by: STACEY-PC

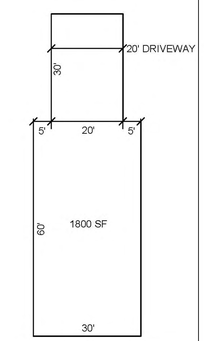

TYPICAL COMMERCIAL UNIT
SCALE: 1" = 20'

NORTH

0 10 20 40 60

SCALE: 1"=20'

LAND USE TABLE

COMMERCIAL SUBDIVISION	1.96 ACRES
COMMERCIAL BUILDINGS (1800 SF)	12 UNITS (21,600 SF TOTAL)
PARKING FOR COMMERCIAL UNITS	83 SPACES
LANDSCAPED AREA	0.43 ACRES (21.27%)

COMMERCIAL PARKING NOTE:
THERE ARE 83 PARKING SPACES IN THE COMMERCIAL SUBDIVISION, OR 6.8 SPACES PER UNIT.
THE NUMBER OF SPACES NEEDED FOR EACH UNIT WILL VARY BASED ON USE.
THERE ARE 2 GARAGE SPACES FOR THE RESIDENTIAL UNIT CONTAINED WITHIN EACH BUILDING.

CONCEPT NOTE:
- OLD MILL VILLAGE MASTER PLAN CONTAINS 15.09 ACRES. 4.92 ACRES IS LANDSCAPED AREA (32.6% OF MASTER PLAN AREA)
- OLD MILL VILLAGE COMMERCIAL SUBDIVISION IS 2.02 ACRES OF THE 15.09 ACRE MASTER PLAN.
- SUBDIVISION WAS RECORD ON 10 MAY 2022 AS ENTRY 518961.

STATE OF UTAH
PAUL D. BERG
PROFESSIONAL ENGINEER
7 May 2024

HEBER CITY ENGINEER ACCEPTANCE

RUSSELL FUNK DATE

JURA HOLDINGS
OLD MILL VILLAGE
AMENDED SITE PLAN

BERG ENGINEERING
380 E Main St. Suite 204
Midway, Ut 84049
ph 435.657.9749

DESIGN BY: PDB
DRAWN BY: DAA
DATE: 7 MAY 2024
REV:
SHEET C2

path: X:\Weber\Bulk - Highway 40\Commercial Subdivision 2023\Final\
file name: 022_SITE PLAN.dwg | plot date: May 13, 2024 | plotted by: STACEY-PC

OLD MILL VILLAGE COMMERCIAL SUBDIVISION – AMENDED

PLAT A

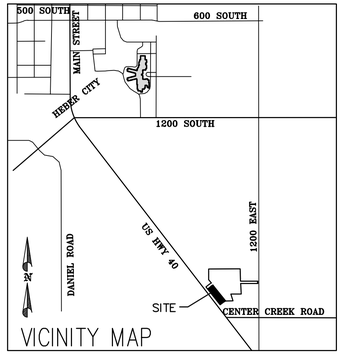

VICINITY MAP

ADDRESS TABLE	
UNIT	ADDRESS
1	928 EAST HARPER LANE
2	932 EAST HARPER LANE
3	934 EAST HARPER LANE
4	936 EAST HARPER LANE
5	938 EAST HARPER LANE
6	942 EAST HARPER LANE

PUBLIC UTILITY EASEMENT NOTE:
1. PUBLIC UTILITY EASEMENTS (PUE'S) ARE NOTED ON THE PLAT.
2. COMMON AREAS HAVE A BLANKET UTILITY EASEMENT DEDICATED TO HEBER CITY OVER THE ENTIRE AREA FOR THE PURPOSES OF INSTALLING AND MAINTAINING HEBER CITY UTILITIES.
3. HEBER CITY HAS THE RIGHT TO ACCESS AND REPAIR ALL PUBLIC UTILITIES. NO CHANGES TO TOPOGRAPHY, STRUCTURES, ABOVE OR BELOW GROUND ARE ALLOWED IN THE EASEMENT WITHIN 20 FEET OF UTILITY WITHOUT WRITTEN PERMISSION FROM HEBER CITY ENGINEER. ANY OBSTACLES ERECTED WITHIN 20 FEET OF CITY UTILITY WILL BE REMOVED AT THE CURRENT PROPERTY OWNER'S EXPENSE.

SHARED ACCESS AND PARKING NOTE:
1. UNITS 1 – 6 HAVE THE RIGHT TO USE HARPER LANE FOR INGRESS AND EGRESS.

UTILITY NOTES:
1. HEBER CITY HAS THE RIGHT OF ACCESS THROUGH THE SEWER AND WATER EASEMENTS TO ACCESS, MAINTAIN, AND REPAIR CITY PUBLIC UTILITIES. COMMON AREAS HAVE A BLANKET UTILITY EASEMENT DEDICATED TO HEBER CITY OVER THE ENTIRE AREA FOR THE PURPOSES OF INSTALLING AND MAINTAINING HEBER CITY UTILITIES. NO CHANGES TO TOPOGRAPHY, STRUCTURES, ABOVE OR BELOW GROUND ARE ALLOWED IN EASEMENTS WITHOUT WRITTEN PERMISSION FROM HEBER CITY ENGINEER. ANY OBSTACLES ERECTED WITHIN THESE EASEMENTS WITHOUT WRITTEN PERMISSION WILL BE REMOVED AT THE CURRENT PROPERTY OWNERS EXPENSE.
2. ALL STORM DRAIN UTILITIES AND THEIR MAINTENANCE WITHIN PRIVATE PROPERTY SHALL BE THE RESPONSIBILITY OF PROPERTY OWNER.
3. ALL SEWER LATERALS AND THEIR MAINTENANCE TO THE PUBLIC SEWER MAIN SHALL BE THE RESPONSIBILITY OF THE PROPERTY OWNER.
4. ALL CULINARY WATER AND SECONDARY WATER SERVICES AND THEIR MAINTENANCE TO THE WATER METER OR SERVICE VAULT SHALL BE THE RESPONSIBILITY OF THE PROPERTY OWNER.

PLAT AMENDMENT NOTES:

1 LOT 1 & 2 HAVE BEEN REMOVED AND REPLACED BY PLATS A AND B WITH COMMERCIAL UNITS, LIMITED COMMON AND COMMON AREA.

2 PUBLIC UTILITY EASEMENTS HAVE BEEN AMENDED.

Curve Table					
Curve #	Length	Radius	Delta	Cd. Length	Cd. Bearing
C1	27.76'	26.00'	061°10'06"	26.46'	N21°25'31"E
C2	59.39'	292.00'	011°39'09"	59.28'	N57°50'08"E
C3	6.90'	25.00'	015°49'26"	6.88'	S46°45'15"E

Line Table		
Line #	Length	Direction
L1	89.94'	N52°00'34"E
L2	98.00'	N77°11'13"E
L3	48.69'	S08°23'33"E

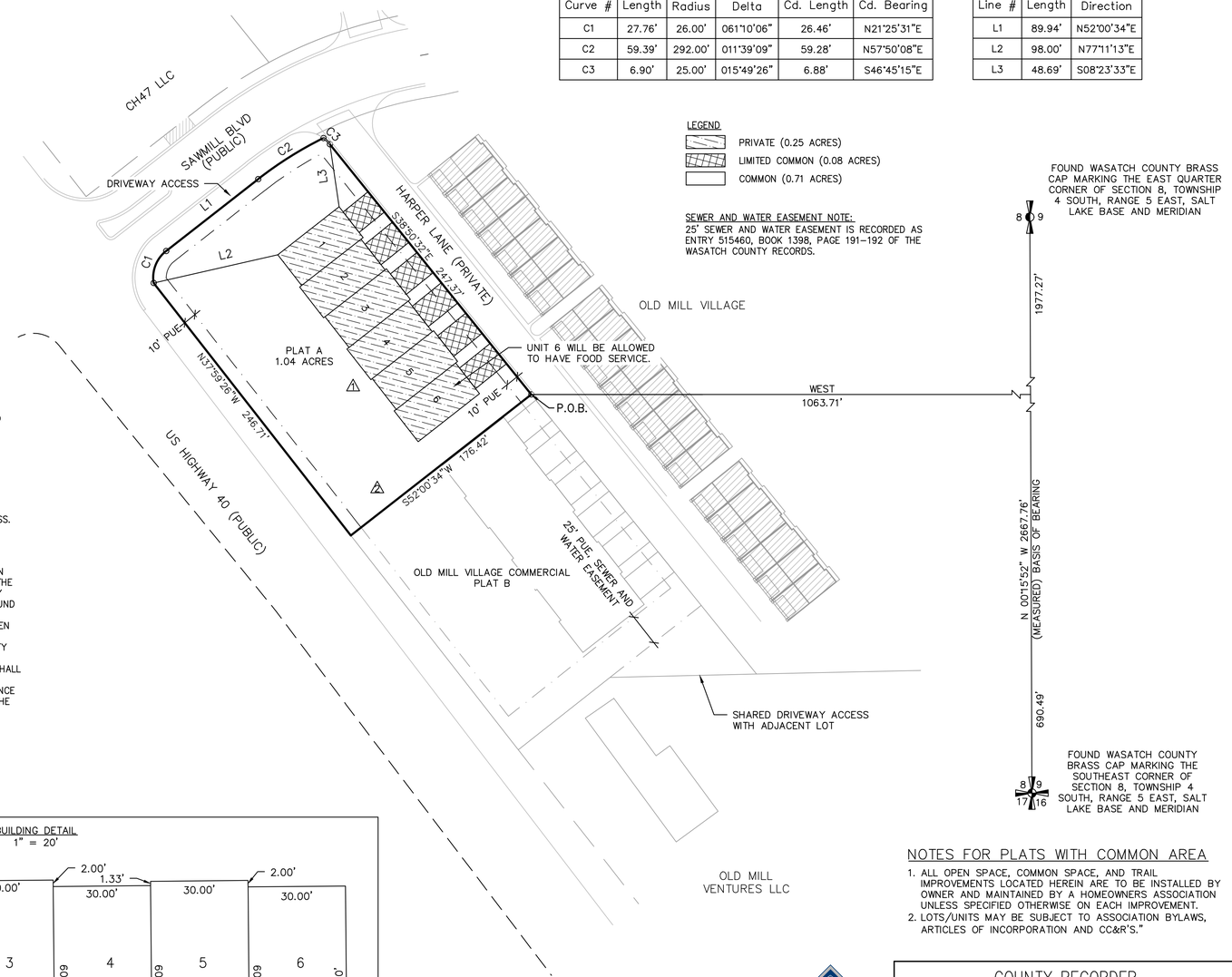

LEGEND
- PRIVATE (0.25 ACRES)
- LIMITED COMMON (0.08 ACRES)
- COMMON (0.71 ACRES)

SEWER AND WATER EASEMENT NOTE:
25' SEWER AND WATER EASEMENT IS RECORDED AS ENTRY 515460, BOOK 1398, PAGE 191–192 OF THE WASATCH COUNTY RECORDS.

BUILDING DETAIL
1" = 20'

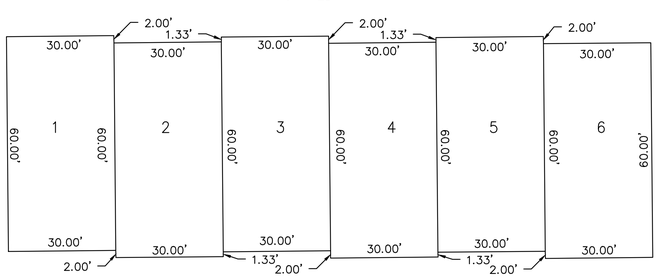

TYPICAL BUILDING DIMENSION DETAIL

NOTES FOR PLATS WITH COMMON AREA
1. ALL OPEN SPACE, COMMON SPACE, AND TRAIL IMPROVEMENTS LOCATED HEREIN ARE TO BE INSTALLED BY OWNER AND MAINTAINED BY A HOMEOWNERS ASSOCIATION UNLESS SPECIFIED OTHERWISE ON EACH IMPROVEMENT.
2. LOTS/UNITS MAY BE SUBJECT TO ASSOCIATION BYLAWS, ARTICLES OF INCORPORATION AND CC&R'S."

SURVEYOR
TROY L TAYLOR, PLS
ELEMENT LAND SURVEYING
2296 SOUTH 270 EAST
HEBER CITY, UT 84032
PHONE (801) 657–8748

DATE OF SURVEY: JULY 2019

OLD MILL VILLAGE COMMERCIAL AMENDED – 7 MAY 2024

SURVEYOR'S CERTIFICATE

I, THE UNDERSIGNED SURVEYOR, DO HEREBY CERTIFY THAT I AM A PROFESSIONAL LAND SURVEYOR AND THAT I HOLD A LICENSE (NUMBER SHOWN BELOW) IN ACCORDANCE WITH UTAH CODE TITLE 58, CHAPTER 22 OF THE PROFESSIONAL ENGINEERS AND LAND SURVEYORS LICENSING ACT. I FURTHER CERTIFY THAT, BY AUTHORITY OF THE OWNERS, I HAVE COMPLETED A SURVEY OF THE PROPERTY DESCRIBED ON THIS SUBDIVISION PLAT IN ACCORDANCE WITH SECTION 17–23–17, HAVE VERIFIED ALL MEASUREMENTS, HAVE SUBDIVIDED SAID TRACT OF LAND INTO LOTS, STREETS, TOGETHER WITH EASEMENTS, AND HAVE PLACED MONUMENTS ON THE GROUND AS REPRESENTED ON THE PLAT. I ALSO CERTIFY THAT I HAVE FILED WITH THE WASATCH COUNTY SURVEYOR, PURSUANT TO STATE LAW, A MAP OF THE SURVEY I COMPLETED.

BOUNDARY DESCRIPTION

BEGINNING AT A POINT WHICH IS NORTH 00°15'52" WEST ALONG THE SECTION LINE 690.49 FEET AND WEST 1063.71 FEET FROM THE SOUTHEAST CORNER OF SECTION 8, TOWNSHIP 4 SOUTH, RANGE 5 EAST, SALT LAKE BASE AND MERIDIAN;

THENCE SOUTH 52°00'34" WEST 176.42 FEET; THENCE NORTH 37°59'26" WEST 246.71 FEET; THENCE ALONG THE ARC OF A 26.00 FOOT RADIUS TO THE RIGHT 27.76 FEET (CENTRAL ANGLE OF 61°10'06" AND A CHORD BEARING NORTH 21°25'31" EAST 26.46 FEET); THENCE NORTH 52°00'34" EAST 89.94 FEET; THENCE ALONG THE ARC OF A 292.00 FOOT RADIUS TO THE RIGHT 59.39 FEET (CENTRAL ANGLE OF 11°39'09" AND A CHORD BEARING NORTH 57°50'08" EAST 59.28 FEET); THENCE ALONG THE ARC OF A 25.00 FOOT RADIUS TO THE RIGHT 6.90 FEET (CENTRAL ANGLE OF 15°49'26" AND A CHORD BEARING SOUTH 46°45'15" EAST 6.88 FEET); THENCE SOUTH 38°50'32" EAST 247.37 FEET TO THE POINT OF BEGINNING.

CONTAINING: 1.04 ACRES

ACRES: 1.04 , # OF UNITS 6 ,# OF PARCELS 6 ,

SURVEYOR'S SEAL

OWNER'S DEDICATION

THE UNDERSIGNED OWNER(S) OF THE ABOVE–DESCRIBED TRACT OF LAND HAS/HAVE CAUSED THE SAME TO BE SUBDIVIDED INTO LOTS, PARCELS, AND STREETS, TOGETHER WITH EASEMENTS AND RIGHTS–OF–WAY, TO BE HEREAFTER KNOWN AS:

OLD MILL VILLAGE COMMERCIAL SUBDIVISION–AMENDED PLAT A

AND DO HEREBY DEDICATE FOR THE PERPETUAL USE OF THE PUBLIC AND CITY ALL PARCELS, LOTS, STREETS, EASEMENTS, RIGHTS–OF–WAY, AND PUBLIC AMENITIES SHOWN ON THIS PLAT AS INTENDED FOR PUBLIC OR CITY USE. THE UNDERSIGNED OWNER(S), AGENTS, SUCCESSORS, AND ASSIGNS SHALL VOLUNTARILY DEFEND, INDEMNIFY, AND SAVE HARMLESS THE CITY AGAINST ANY EASEMENTS OR OTHER ENCUMBRANCE ON A DEDICATED STREET, EASEMENT, OR RIGHT–OF–WAY THAT WILL INTERFERE WITH THE CITY'S USE, MAINTENANCE, AND OPERATION OF THE STREET OR UTILITIES. THE UNDERSIGNED OWNER(S), AGENTS, SUCCESSORS, AND ASSIGNS ALSO HEREBY CONVEY ANY OTHER EASEMENTS, AS SHOWN AND/OR NOTED ON THIS PLAT, TO THE PARTIES INDICATED AND FOR THE PURPOSES SHOWN AND/OR NOTED HEREON. THE CITY ASSUMES NO LIABILITY WITH RESPECT TO THE CREATION OF THIS SUBDIVISION, THE ALTERATION OF THE GROUND SURFACE, VEGETATION, DRAINAGE, OR SURFACE OR SUB–SURFACE WATER FLOWS WITHIN THIS SUBDIVISION, AND THE DEVELOPMENT ACTIVITY WITHIN THIS SUBDIVISION.

IN WITNESS WHEREOF I HAVE SET FORTH MY HAND THIS___DAY OF_____, 20____,

SIGNATURE | PRINT NAME | TITLE & ENTRY

SIGNATURE | PRINT NAME | TITLE & ENTRY

OWNER'S ACKNOWLEDGMENT

STATE OF UTAH
COUNTY OF UTAH } S.S.

ON THIS_____DAY OF_____, 20___, PERSONALLY APPEARED BEFORE ME_____, WHO BEING BY ME DULY SWORN, DID PROVE TO ME ON THE BASIS OF SATISFACTORY EVIDENCE TO BE THE PERSON(S) WHOSE NAME(S) IS/ARE SUBSCRIBED TO THE WITHIN INSTRUMENT, AND ACKNOWLEDGED TO ME THAT HE/SHE/THEY EXECUTED THE SAME IN HIS/HER/THEIR AUTHORIZED CAPACITY(IES).

WITNESS MY HAND AND OFFICIAL SEAL.

NOTARY PUBLIC FULL NAME: _____,

COMMISSION NUMBER: _____MY COMMISSION EXPIRES_____,
A NOTARY PUBLIC COMMISSIONED IN UTAH

COUNTY RECORDER

BASIS OF BEARINGS

THE BASIS OF BEARING IS SOUTH 00°15'52" EAST BETWEEN THE FOUND EAST QUARTER CORNER AND THE FOUND SOUTHEAST CORNER OF SECTION 8, TOWNSHIP 4 SOUTH, RANGE 5 EAST, SALT LAKE BASE AND MERIDIAN.

APPROVAL BY LEGISLATIVE BODY

THE CITY COUNCIL OF HEBER CITY, COUNTY OF WASATCH, APPROVES THIS SUBDIVISION SUBJECT TO THE CONDITIONS AND RESTRICTIONS STATED HEREON, AND HEREBY ACCEPTS THE DEDICATION OF ALL STREETS, EASEMENTS, AND OTHER PARCELS OF LAND INTENDED FOR THE PUBLIC PURPOSE OF THE PERPETUAL USE OF THE PUBLIC.

MAYOR | DATE | RECORDER'S SEAL

PLANNING DIRECTOR

APPROVED ON THIS_____ DAY OF_____ , 20____,

PLANNING DIRECTOR

CITY ENGINEER

APPROVED ON THIS_____ DAY OF_____ , 20____,

CITY ENGINEER

WASATCH CO. FIRE DISTRICT

APPROVED ON THIS_____ DAY OF_____ , 20____,

FIRE CHIEF

CITY ATTORNEY

APPROVED ON THIS_____ DAY OF_____ , 20____,

CITY ATTORNEY

COUNTY SURVEYOR

APPROVED ON THIS_____ DAY OF_____ , 20____,

COUNTY SURVEYOR

OLD MILL VILLAGE COMMERCIAL SUBDIVISION–AMENDED PLAT A

LOCATED IN THE SOUTHWEST QUARTER OF SECTION 8 TOWNSHIP 4 SOUTH, RANGE 5 EAST SALT LAKE BASE AND MERIDIAN.

SHEET 1 of 1

OLD MILL VILLAGE COMMERCIAL SUBDIVISION – AMENDED
PLAT B

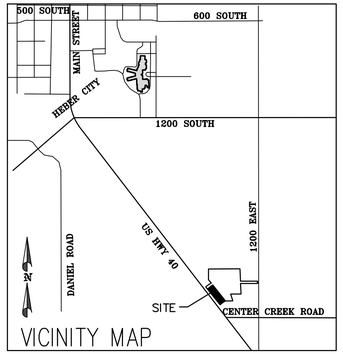

VICINITY MAP

ADDRESS TABLE	
UNIT	ADDRESS
7	948 EAST HARPER LANE
8	952 EAST HARPER LANE
9	954 EAST HARPER LANE
10	956 EAST HARPER LANE
11	958 EAST HARPER LANE
12	962 EAST HARPER LANE

PUBLIC UTILITY EASEMENT NOTE:
1. PUBLIC UTILITY EASEMENTS (PUE'S) ARE NOTED ON THE PLAT.
2. COMMON AREAS HAVE A BLANKET UTILITY EASEMENT DEDICATED TO HEBER CITY OVER THE ENTIRE AREA FOR THE PURPOSES OF INSTALLING AND MAINTAINING HEBER CITY UTILITIES.
3. HEBER CITY HAS THE RIGHT TO ACCESS AND REPAIR ALL PUBLIC UTILITIES. NO CHANGES TO TOPOGRAPHY, STRUCTURES, ABOVE OR BELOW GROUND ARE ALLOWED IN THE EASEMENT WITHIN 20 FEET OF UTILITY WITHOUT WRITTEN PERMISSION FROM HEBER CITY ENGINEER. ANY OBSTACLES ERECTED WITHIN 20 FEET OF CITY UTILITY WILL BE REMOVED AT THE CURRENT PROPERTY OWNER'S EXPENSE.

SHARED ACCESS AND PARKING NOTE:
1. UNITS 7 – 12 HAVE THE RIGHT TO USE HARPER LANE FOR INGRESS AND EGRESS.

UTILITY NOTES:
1. HEBER CITY HAS THE RIGHT OF ACCESS THROUGH THE SEWER AND WATER EASEMENTS TO ACCESS, MAINTAIN, AND REPAIR CITY PUBLIC UTILITIES. COMMON AREAS HAVE A BLANKET UTILITY EASEMENT DEDICATED TO HEBER CITY OVER THE ENTIRE AREA FOR THE PURPOSES OF INSTALLING AND MAINTAINING HEBER CITY UTILITIES. NO CHANGES TO TOPOGRAPHY, STRUCTURES, ABOVE OR BELOW GROUND ARE ALLOWED IN EASEMENTS WITHOUT WRITTEN PERMISSION FROM HEBER CITY ENGINEER. ANY OBSTACLES ERECTED WITHIN THESE EASEMENTS WITHOUT WRITTEN PERMISSION WILL BE REMOVED AT THE CURRENT PROPERTY OWNERS EXPENSE.
2. ALL STORM DRAIN UTILITIES AND THEIR MAINTENANCE WITHIN PRIVATE PROPERTY SHALL BE THE RESPONSIBILITY OF PROPERTY OWNER.
3. ALL SEWER LATERALS AND THEIR MAINTENANCE TO THE PUBLIC SEWER MAIN SHALL BE THE RESPONSIBILITY OF THE PROPERTY OWNER.
4. ALL CULINARY WATER AND SECONDARY WATER SERVICES AND THEIR MAINTENANCE TO THE WATER METER OR SERVICE VAULT SHALL BE THE RESPONSIBILITY OF THE PROPERTY OWNER.

PLAT AMENDMENT NOTES:

1 LOT 1 & 2 HAVE BEEN REMOVED AND REPLACED BY PLATS A AND B WITH COMMERCIAL UNITS, LIMITED COMMON AND COMMON AREA.

2 PUBLIC UTILITY EASEMENTS HAVE BEEN AMENDED.

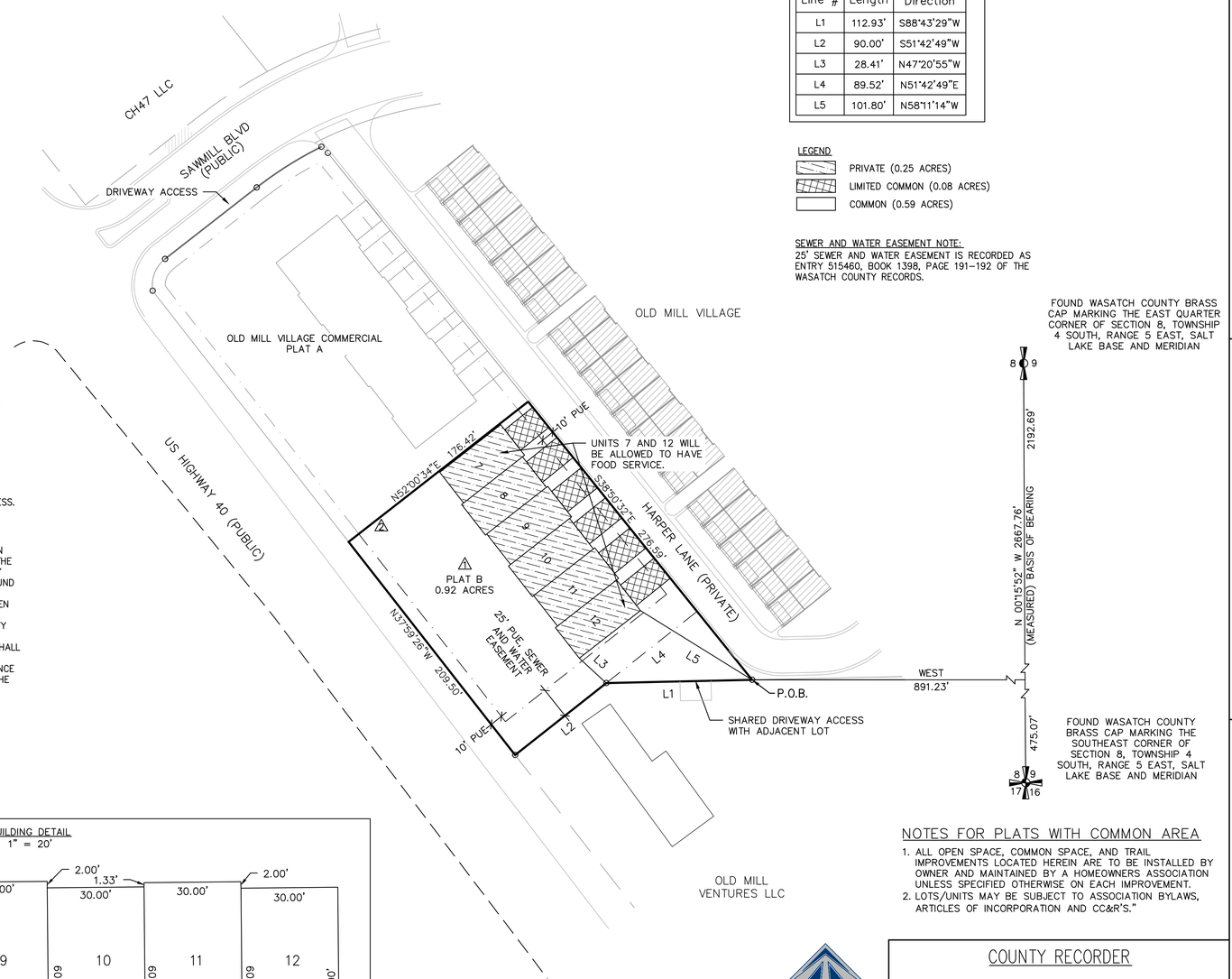

Line Table		
Line #	Length	Direction
L1	112.93'	S88°43'29"W
L2	90.00'	S51°42'49"W
L3	28.41'	N47°20'55"W
L4	89.52'	N51°42'49"E
L5	101.80'	N58°11'14"W

LEGEND
- PRIVATE (0.25 ACRES)
- LIMITED COMMON (0.08 ACRES)
- COMMON (0.59 ACRES)

SEWER AND WATER EASEMENT NOTE:
25' SEWER AND WATER EASEMENT IS RECORDED AS ENTRY 515460, BOOK 1398, PAGE 191–192 OF THE WASATCH COUNTY RECORDS.

FOUND WASATCH COUNTY BRASS CAP MARKING THE EAST QUARTER CORNER OF SECTION 8, TOWNSHIP 4 SOUTH, RANGE 5 EAST, SALT LAKE BASE AND MERIDIAN

FOUND WASATCH COUNTY BRASS CAP MARKING THE SOUTHEAST CORNER OF SECTION 8, TOWNSHIP 4 SOUTH, RANGE 5 EAST, SALT LAKE BASE AND MERIDIAN

BUILDING DETAIL
1" = 20'

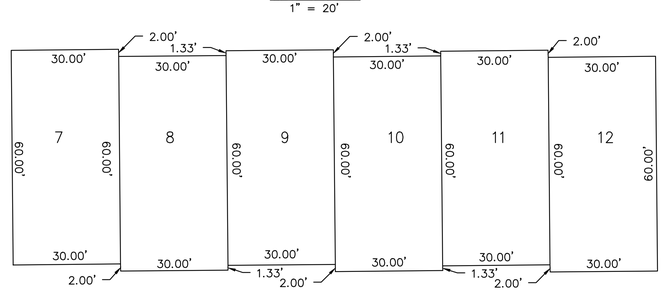

TYPICAL BUILDING DIMENSION DETAIL

NOTES FOR PLATS WITH COMMON AREA
1. ALL OPEN SPACE, COMMON SPACE, AND TRAIL IMPROVEMENTS LOCATED HEREIN ARE TO BE INSTALLED BY OWNER AND MAINTAINED BY A HOMEOWNERS ASSOCIATION UNLESS SPECIFIED OTHERWISE ON EACH IMPROVEMENT.
2. LOTS/UNITS MAY BE SUBJECT TO ASSOCIATION BYLAWS, ARTICLES OF INCORPORATION AND CC&R'S."

SURVEYOR
TROY L TAYLOR, PLS
ELEMENT LAND SURVEYING
2296 SOUTH 270 EAST
HEBER CITY, UT 84032
PHONE (801) 657–8748

DATE OF SURVEY: JULY 2019

OLD MILL VILLAGE COMMERCIAL AMENDED – 7 MAY 2024

SURVEYOR'S CERTIFICATE

I, THE UNDERSIGNED SURVEYOR, DO HEREBY CERTIFY THAT I AM A PROFESSIONAL LAND SURVEYOR AND THAT I HOLD A LICENSE (NUMBER SHOWN BELOW) IN ACCORDANCE WITH UTAH CODE TITLE 58, CHAPTER 22 OF THE PROFESSIONAL ENGINEERS AND LAND SURVEYORS LICENSING ACT. I FURTHER CERTIFY THAT, BY AUTHORITY OF THE OWNERS, I HAVE COMPLETED A SURVEY OF THE PROPERTY DESCRIBED ON THIS SUBDIVISION PLAT IN ACCORDANCE WITH SECTION 17–23–17, HAVE VERIFIED ALL MEASUREMENTS, HAVE SUBDIVIDED SAID TRACT OF LAND INTO LOTS, STREETS, TOGETHER WITH EASEMENTS, AND HAVE PLACED MONUMENTS ON THE GROUND AS REPRESENTED ON THE PLAT. I ALSO CERTIFY THAT I HAVE FILED WITH THE WASATCH COUNTY SURVEYOR, PURSUANT TO STATE LAW, A MAP OF THE SURVEY I COMPLETED.

BOUNDARY DESCRIPTION

BEGINNING AT A POINT WHICH IS NORTH 00°15'52" WEST ALONG THE SECTION LINE 475.07 FEET AND WEST 891.23 FEET FROM THE SOUTHEAST CORNER OF SECTION 8, TOWNSHIP 4 SOUTH, RANGE 5 EAST, SALT LAKE BASE AND MERIDIAN;

THENCE SOUTH 88°43'29" WEST 112.93 FEET; THENCE SOUTH 51°42'49" WEST 90.00 FEET; THENCE NORTH 37°59'26" WEST 209.50 FEET; THENCE NORTH 52°00'34" EAST 176.42 FEET; THENCE SOUTH 38°50'32" EAST 276.59 FEET TO THE POINT OF BEGINNING.

CONTAINING: 0.92 ACRES

ACRES: 0.92 , # OF UNITS 6 ,# OF PARCELS 6 ,

SURVEYOR'S SEAL

OWNER'S DEDICATION

THE UNDERSIGNED OWNER(S) OF THE ABOVE–DESCRIBED TRACT OF LAND HAS/HAVE CAUSED THE SAME TO BE SUBDIVIDED INTO LOTS, PARCELS, AND STREETS, TOGETHER WITH EASEMENTS AND RIGHTS–OF–WAY, TO BE HEREAFTER KNOWN AS:

OLD MILL VILLAGE COMMERCIAL SUBDIVISION–AMENDED PLAT B

AND DO HEREBY DEDICATE FOR THE PERPETUAL USE OF THE PUBLIC AND CITY ALL PARCELS, LOTS, STREETS, EASEMENTS, RIGHTS–OF–WAY, AND PUBLIC AMENITIES SHOWN ON THIS PLAT AS INTENDED FOR PUBLIC OR CITY USE. THE UNDERSIGNED OWNER(S), AGENTS, SUCCESSORS, AND ASSIGNS SHALL VOLUNTARILY DEFEND, INDEMNIFY, AND SAVE HARMLESS THE CITY AGAINST ANY EASEMENTS OR OTHER ENCUMBRANCE ON A DEDICATED STREET, EASEMENT, OR RIGHT–OF–WAY THAT WILL INTERFERE WITH THE CITY'S USE, MAINTENANCE, AND OPERATION OF THE STREET OR UTILITIES. THE UNDERSIGNED OWNER(S), AGENTS, SUCCESSORS, AND ASSIGNS ALSO HEREBY CONVEY ANY OTHER EASEMENTS, AS SHOWN AND/OR NOTED ON THIS PLAT, TO THE PARTIES INDICATED AND FOR THE PURPOSES SHOWN AND/OR NOTED HEREON. THE CITY ASSUMES NO LIABILITY WITH RESPECT TO THE CREATION OF THIS SUBDIVISION, THE ALTERATION OF THE GROUND SURFACE, VEGETATION, DRAINAGE, OR SURFACE OR SUB–SURFACE WATER FLOWS WITHIN THIS SUBDIVISION, AND THE DEVELOPMENT ACTIVITY WITHIN THIS SUBDIVISION.

IN WITNESS WHEREOF I HAVE SET FORTH MY HAND THIS___DAY OF_____, 20____,

SIGNATURE	PRINT NAME	TITLE & ENTRY
SIGNATURE	PRINT NAME	TITLE & ENTRY

OWNER'S ACKNOWLEDGMENT

STATE OF UTAH
COUNTY OF UTAH } S.S.

ON THIS_____DAY OF_____, 20___, PERSONALLY APPEARED BEFORE ME_____, WHO BEING BY ME DULY SWORN, DID PROVE TO ME ON THE BASIS OF SATISFACTORY EVIDENCE TO BE THE PERSON(S) WHOSE NAME(S) IS/ARE SUBSCRIBED TO THE WITHIN INSTRUMENT, AND ACKNOWLEDGED TO ME THAT HE/SHE/THEY EXECUTED THE SAME IN HIS/HER/THEIR AUTHORIZED CAPACITY(IES).

WITNESS MY HAND AND OFFICIAL SEAL.

NOTARY PUBLIC FULL NAME: _____,

COMMISSION NUMBER: _____MY COMMISSION EXPIRES_____,
A NOTARY PUBLIC COMMISSIONED IN UTAH

COUNTY RECORDER

BASIS OF BEARINGS

THE BASIS OF BEARING IS SOUTH 00°15'52" EAST BETWEEN THE FOUND EAST QUARTER CORNER AND THE FOUND SOUTHEAST CORNER OF SECTION 8, TOWNSHIP 4 SOUTH, RANGE 5 EAST, SALT LAKE BASE AND MERIDIAN.

APPROVAL BY LEGISLATIVE BODY

THE CITY COUNCIL OF HEBER CITY, COUNTY OF WASATCH, APPROVES THIS SUBDIVISION SUBJECT TO THE CONDITIONS AND RESTRICTIONS STATED HEREON, AND HEREBY ACCEPTS THE DEDICATION OF ALL STREETS, EASEMENTS, AND OTHER PARCELS OF LAND INTENDED FOR THE PUBLIC PURPOSE OF THE PERPETUAL USE OF THE PUBLIC.

MAYOR | DATE | RECORDER'S SEAL

PLANNING DIRECTOR

APPROVED ON THIS_____ DAY OF_____ , 20____.

PLANNING DIRECTOR

CITY ENGINEER

APPROVED ON THIS_____ DAY OF_____ , 20____.

CITY ENGINEER

WASATCH CO. FIRE DISTRICT

APPROVED ON THIS_____ DAY OF_____ , 20____.

FIRE CHIEF

CITY ATTORNEY

APPROVED ON THIS_____ DAY OF_____ , 20____.

CITY ATTORNEY

COUNTY SURVEYOR

APPROVED ON THIS_____ DAY OF_____ , 20____.

COUNTY SURVEYOR

OLD MILL VILLAGE COMMERCIAL SUBDIVISION–AMENDED PLAT B

LOCATED IN THE SOUTHWEST QUARTER OF SECTION 8 TOWNSHIP 4 SOUTH, RANGE 5 EAST SALT LAKE BASE AND MERIDIAN.

SHEET 1 of 1

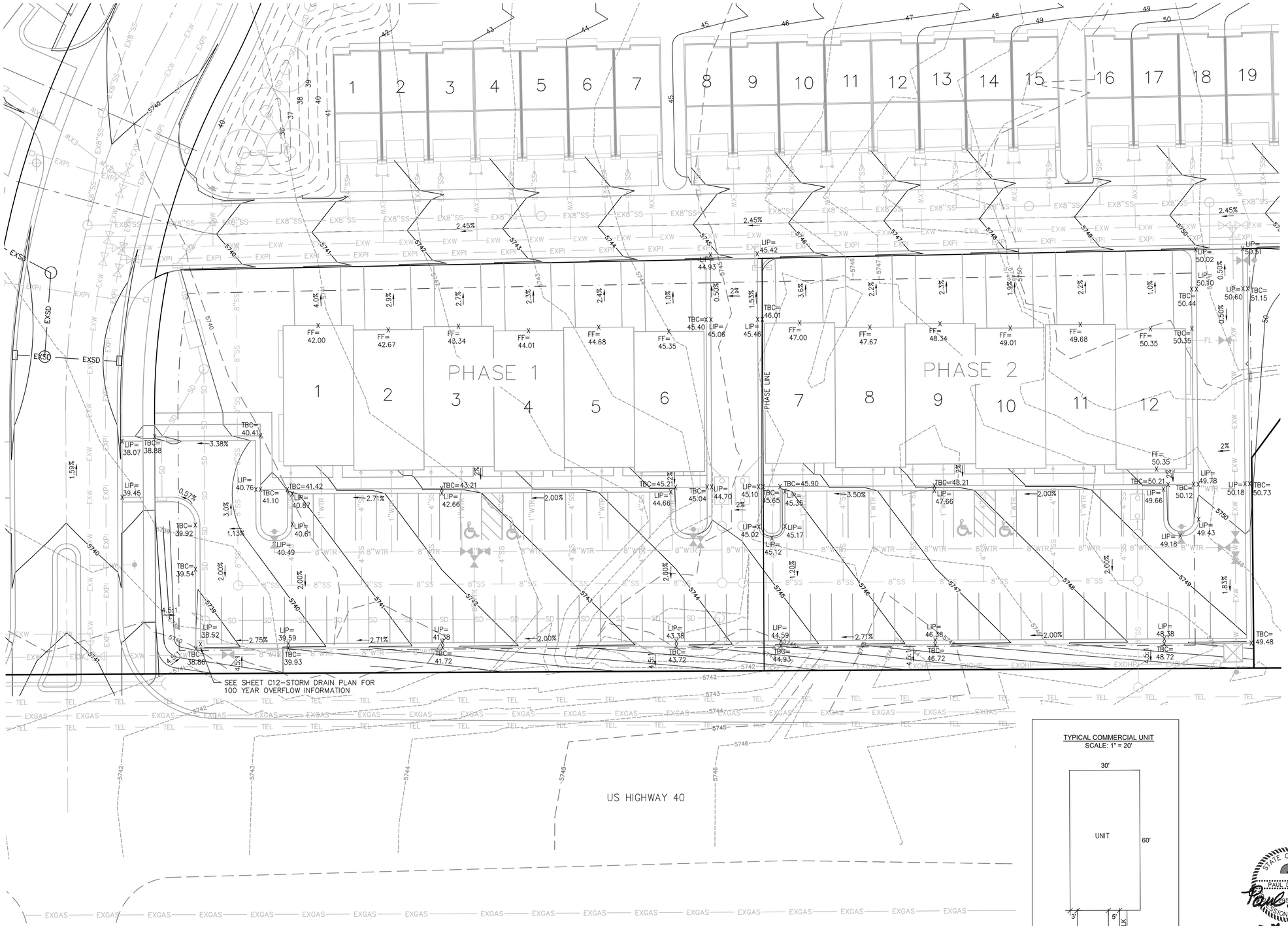

BLUE STAKE NOTE:

- LOCATION OF EXISTING UTILITIES SHOWN ON PLAN ARE APPROXIMATE AND MAY BE INCOMPLETE. CONTRACTOR IS RESPONSIBLE FOR BLUE STAKING OF UTILITIES.

- ALL GRADING AND PAVING SHALL COMPLY WITH HEBER CITY STANDARDS AND SPECIFICATIONS AND THE RECOMMENDATIONS IN THE GEOTECHNICAL REPORT.

TYPICAL COMMERCIAL UNIT
SCALE: 1" = 20'

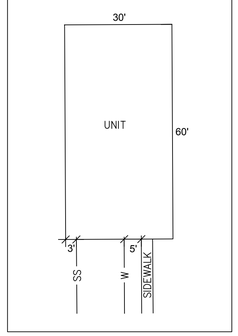

NORTH

0 10 20 40 60

SCALE: 1"=20'

STATE OF UTAH
PAUL D. BERG
PROFESSIONAL ENGINEER

7 May 2024

HEBER CITY ENGINEER ACCEPTANCE

RUSSELL FUNK DATE

JURA HOLDINGS

OLD MILL VILLAGE

GRADING PLAN

BERG ENGINEERING
380 E Main St. Suite 204
Midway, Ut 84049
ph 435.657.9749

DESIGN BY: PDB DRAWN BY: SW	DATE: 7 MAY 2024 REV:	SHEET C4

path: X:\Heber\Bulk - Highway 40\Commercial Subdivision_2023\Plat\ plotted by: STACEY-PC
file name: C04_GRADING PLAN.dwg plot date: May 13, 2024

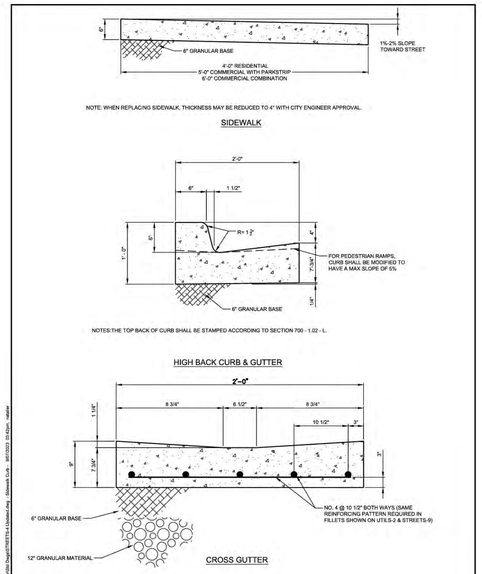

HEBER CITY — GATE OF THE WASATCH BACK
DATE: 09/23 | SCALE: N.T.S. | 75 NORTH MAIN STREET HEBER CITY, UTAH 84032 (435) 654-0757
SIDEWALK, HIGH-BACK CURB & CROSS-GUTTER
STREETS-4

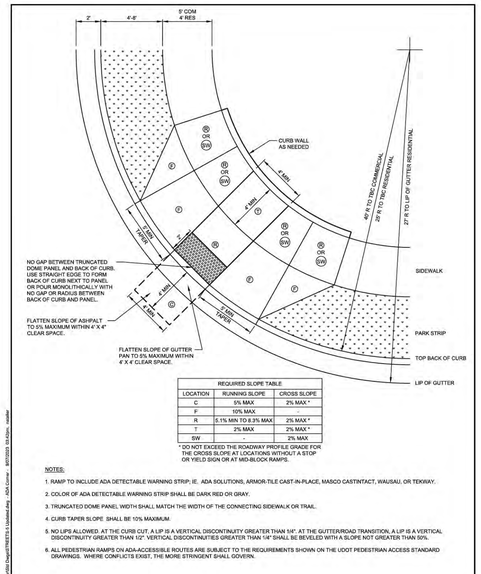

REQUIRED SLOPE TABLE		
LOCATION	RUNNING SLOPE	CROSS SLOPE
C	5% MAX	2% MAX *
F	10% MAX	-
R	5.1% MIN TO 8.3% MAX	2% MAX *
T	2% MAX	2% MAX *
SW	-	2% MAX

* DO NOT EXCEED THE ROADWAY PROFILE GRADE FOR THE CROSS SLOPE AT LOCATIONS WITHOUT A STOP OR YIELD SIGN OR AT MID-BLOCK RAMPS.

NOTES:

1. RAMP TO INCLUDE ADA DETECTABLE WARNING STRIP, IE. ADA SOLUTIONS, ARMOR-TILE CAST-IN-PLACE, MASCO CASTINTACT, WAUSAU, OR TEKWAY.
2. COLOR OF ADA DETECTABLE WARNING STRIP SHALL BE DARK RED OR GRAY.
3. TRUNCATED DOME PANEL WIDTH SHALL MATCH THE WIDTH OF THE CONNECTING SIDEWALK OR TRAIL.
4. CURB TAPER SLOPE SHALL BE 10% MAXIMUM.
5. NO LIPS ALLOWED AT THE CURB CUT. A LIP IS A VERTICAL DISCONTINUITY GREATER THAN 1/4". AT THE GUTTER/ROAD TRANSITION, A LIP IS A VERTICAL DISCONTINUITY GREATER THAN 1/2". VERTICAL DISCONTINUITIES GREATER THAN 1/4" SHALL BE BEVELED WITH A SLOPE NOT GREATER THAN 50%.
6. ALL PEDESTRIAN RAMPS ON ADA-ACCESSIBLE ROUTES ARE SUBJECT TO THE REQUIREMENTS SHOWN ON THE UDOT PEDESTRIAN ACCESS STANDARD DRAWINGS. WHERE CONFLICTS EXIST, THE MORE STRINGENT SHALL GOVERN.

HEBER CITY — GATE OF THE WASATCH BACK
DATE: 09/23 | SCALE: N.T.S. | 75 NORTH MAIN STREET HEBER CITY, UTAH 84032 (435) 654-0757
CORNER PEDESTRIAN RAMPS
STREETS-5

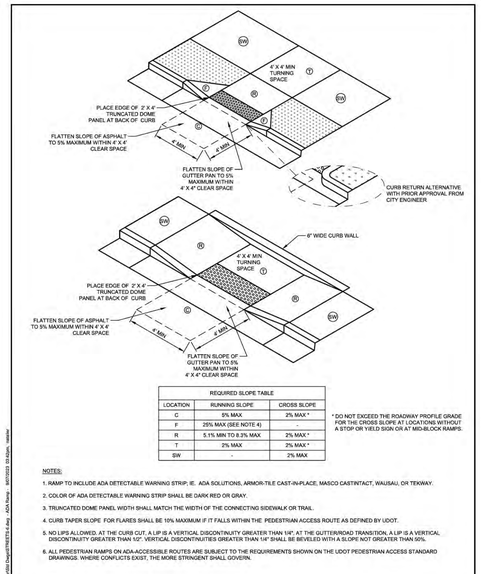

REQUIRED SLOPE TABLE		
LOCATION	RUNNING SLOPE	CROSS SLOPE
C	5% MAX	2% MAX *
F	25% MAX (SEE NOTE 4)	-
R	5.1% MIN TO 8.3% MAX	2% MAX *
T	2% MAX	2% MAX *
SW	-	2% MAX

* DO NOT EXCEED THE ROADWAY PROFILE GRADE FOR THE CROSS SLOPE AT LOCATIONS WITHOUT A STOP OR YIELD SIGN OR AT MID-BLOCK RAMPS.

NOTES:

1. RAMP TO INCLUDE ADA DETECTABLE WARNING STRIP, IE. ADA SOLUTIONS, ARMOR-TILE CAST-IN-PLACE, MASCO CASTINTACT, WAUSAU, OR TEKWAY.
2. COLOR OF ADA DETECTABLE WARNING STRIP SHALL BE DARK RED OR GRAY.
3. TRUNCATED DOME PANEL WIDTH SHALL MATCH THE WIDTH OF THE CONNECTING SIDEWALK OR TRAIL.
4. CURB TAPER SLOPE FOR FLARES SHALL BE 10% MAXIMUM IF IT FALLS WITHIN THE PEDESTRIAN ACCESS ROUTE AS DEFINED BY UDOT.
5. NO LIPS ALLOWED AT THE CURB CUT. A LIP IS A VERTICAL DISCONTINUITY GREATER THAN 1/4". AT THE GUTTER/ROAD TRANSITION, A LIP IS A VERTICAL DISCONTINUITY GREATER THAN 1/2". VERTICAL DISCONTINUITIES GREATER THAN 1/4" SHALL BE BEVELED WITH A SLOPE NOT GREATER THAN 50%.
6. ALL PEDESTRIAN RAMPS ON ADA-ACCESSIBLE ROUTES ARE SUBJECT TO THE REQUIREMENTS SHOWN ON THE UDOT PEDESTRIAN ACCESS STANDARD DRAWINGS. WHERE CONFLICTS EXIST, THE MORE STRINGENT SHALL GOVERN.

HEBER CITY — GATE OF THE WASATCH BACK
DATE: 06/21 | SCALE: N.T.S. | 75 NORTH MAIN STREET HEBER CITY, UTAH 84032 (435) 654-0757
MID-BLOCK PEDESTRIAN RAMPS
STREETS-6

3" ASPHALT
6" ROAD BASE
SUITABLE NATIVE A-1a MATERIAL OR 8" MINIMUM OF GRANULAR BORROW PER GEOTECH REPORT

PARKING LOT SECTION

ALL MATERIAL & INSTALLATION TO HEBER CITY STANDARDS AND SPECIFICATIONS

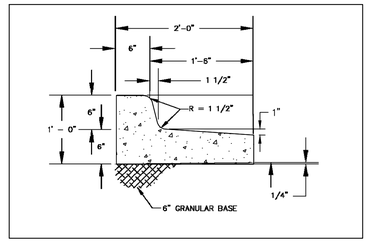

SPILL CURB DETAIL
NTS

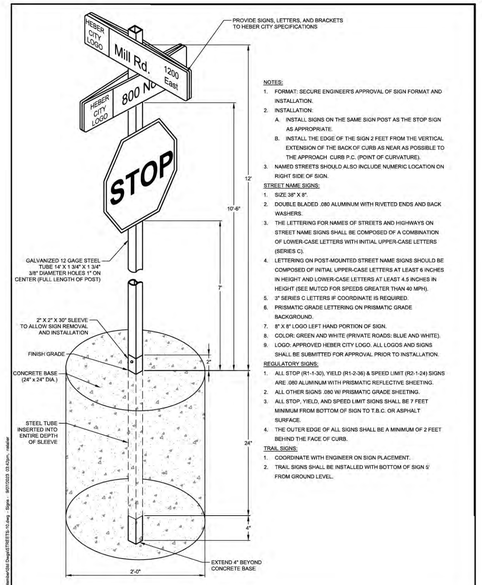

NOTES:

1. FORMAT: SECURE ENGINEER'S APPROVAL OF SIGN FORMAT AND INSTALLATION.
2. INSTALLATION:
   A. INSTALL SIGNS ON THE SAME SIGN POST AS THE STOP SIGN AS APPROPRIATE.
   B. INSTALL THE EDGE OF THE SIGN 2 FEET FROM THE VERTICAL EXTENSION OF THE BACK OF CURB AS NEAR AS POSSIBLE TO THE APPROACH CURB P.C. (POINT OF CURVATURE).
3. NAMED STREETS SHOULD ALSO INCLUDE NUMERIC LOCATION ON RIGHT SIDE OF SIGN.

STREET NAME SIGNS:

1. SIZE:36" X 8".
2. DOUBLE BLADED .080 ALUMINUM WITH RIVETED ENDS AND BACK WASHERS.
3. THE LETTERING FOR NAMES OF STREETS AND HIGHWAYS ON STREET NAME SIGNS SHALL BE COMPOSED OF A COMBINATION OF LOWER-CASE LETTERS WITH INITIAL UPPER-CASE LETTERS (SERIES C).
4. LETTERING ON POST-MOUNTED STREET NAME SIGNS SHOULD BE COMPOSED OF INITIAL UPPER-CASE LETTERS AT LEAST 6 INCHES IN HEIGHT AND LOWER-CASE LETTERS AT LEAST 4.5 INCHES IN HEIGHT (SEE MUTCD FOR SPEEDS GREATER THAN 40 MPH).
5. 3" SERIES C LETTERS IF COORDINATE IS REQUIRED.
6. PRISMATIC GRADE LETTERING ON PRISMATIC GRADE BACKGROUND.
7. 8" X 8" LOGO LEFT HAND PORTION OF SIGN.
8. COLOR: GREEN AND WHITE (PRIVATE ROADS; BLUE AND WHITE).
9. LOGO: APPROVED HEBER CITY LOGO. ALL LOGOS AND SIGNS SHALL BE SUBMITTED FOR APPROVAL PRIOR TO INSTALLATION.

REGULATORY SIGNS:

1. ALL STOP (R1-1-30), YIELD (R1-2-36) & SPEED LIMIT (R2-1-24) SIGNS ARE .080 ALUMINUM WITH PRISMATIC REFLECTIVE SHEETING.
2. ALL OTHER SIGNS .080 W/ PRISMATIC GRADE SHEETING.
3. ALL STOP, YIELD, AND SPEED LIMIT SIGNS SHALL BE 7 FEET MINIMUM FROM BOTTOM OF SIGN TO T.B.C. OR ASPHALT SURFACE.
4. THE OUTER EDGE OF ALL SIGNS SHALL BE A MINIMUM OF 2 FEET BEHIND THE FACE OF CURB.

TRAIL SIGNS:

1. COORDINATE WITH ENGINEER ON SIGN PLACEMENT.
2. TRAIL SIGNS SHALL BE INSTALLED WITH BOTTOM OF SIGN 5' FROM GROUND LEVEL.

HEBER CITY — GATE OF THE WASATCH BACK
DATE: 02/19 | SCALE: N.T.S. | 75 NORTH MAIN STREET HEBER CITY, UTAH 84032 (435) 654-0757
SIGNS
STREETS-10

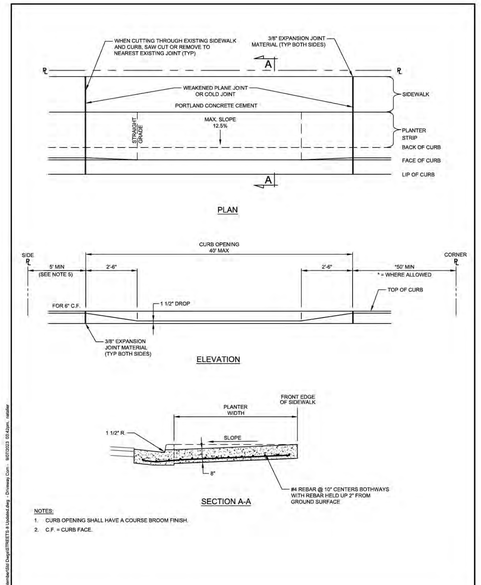

NOTES:

1. CURB OPENING SHALL HAVE A COURSE BROOM FINISH.
2. C.F. = CURB FACE.

HEBER CITY — GATE OF THE WASATCH BACK
DATE: 09/23 | SCALE: N.T.S. | 75 NORTH MAIN STREET HEBER CITY, UTAH 84032 (435) 654-0757
COMMERCIAL DRIVEWAY APPROACH
STREETS-8

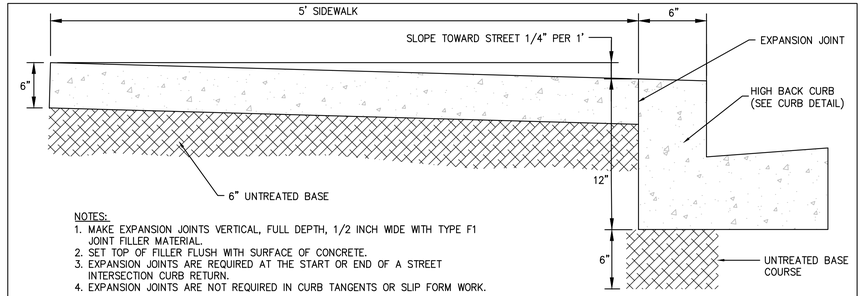

NOTES:

1. MAKE EXPANSION JOINTS VERTICAL, FULL DEPTH, 1/2 INCH WIDE WITH TYPE F1 JOINT FILLER MATERIAL.
2. SET TOP OF FILLER FLUSH WITH SURFACE OF CONCRETE.
3. EXPANSION JOINTS ARE REQUIRED AT THE START OR END OF A STREET INTERSECTION CURB RETURN.
4. EXPANSION JOINTS ARE NOT REQUIRED IN CURB TANGENTS OR SLIP FORM WORK.

HIGH BACK CURB WITH SIDEWALK
USE WHERE CURB ABUTS SIDEWALK
N.T.S.

HEBER CITY ENGINEER ACCEPTANCE

RUSSELL FUNK — DATE

JURA HOLDINGS
OLD MILL VILLAGE

PAVING & GRADING DETAILS

BERG ENGINEERING
380 E Main St. Suite 204
Midway, Ut 84049
ph 435.657.9749

DESIGN BY: PDB	DATE: 7 MAY 2024	SHEET
DRAWN BY: SW	REV:	C5

path: X:\Heber\Bula - Highway 40\Commercial Subdivision_2023\Dwg\
file name: C05_GRADING & PAVING DETAILS.dwg | plot date: May 08, 2024 | plotted by: STACEY-PC

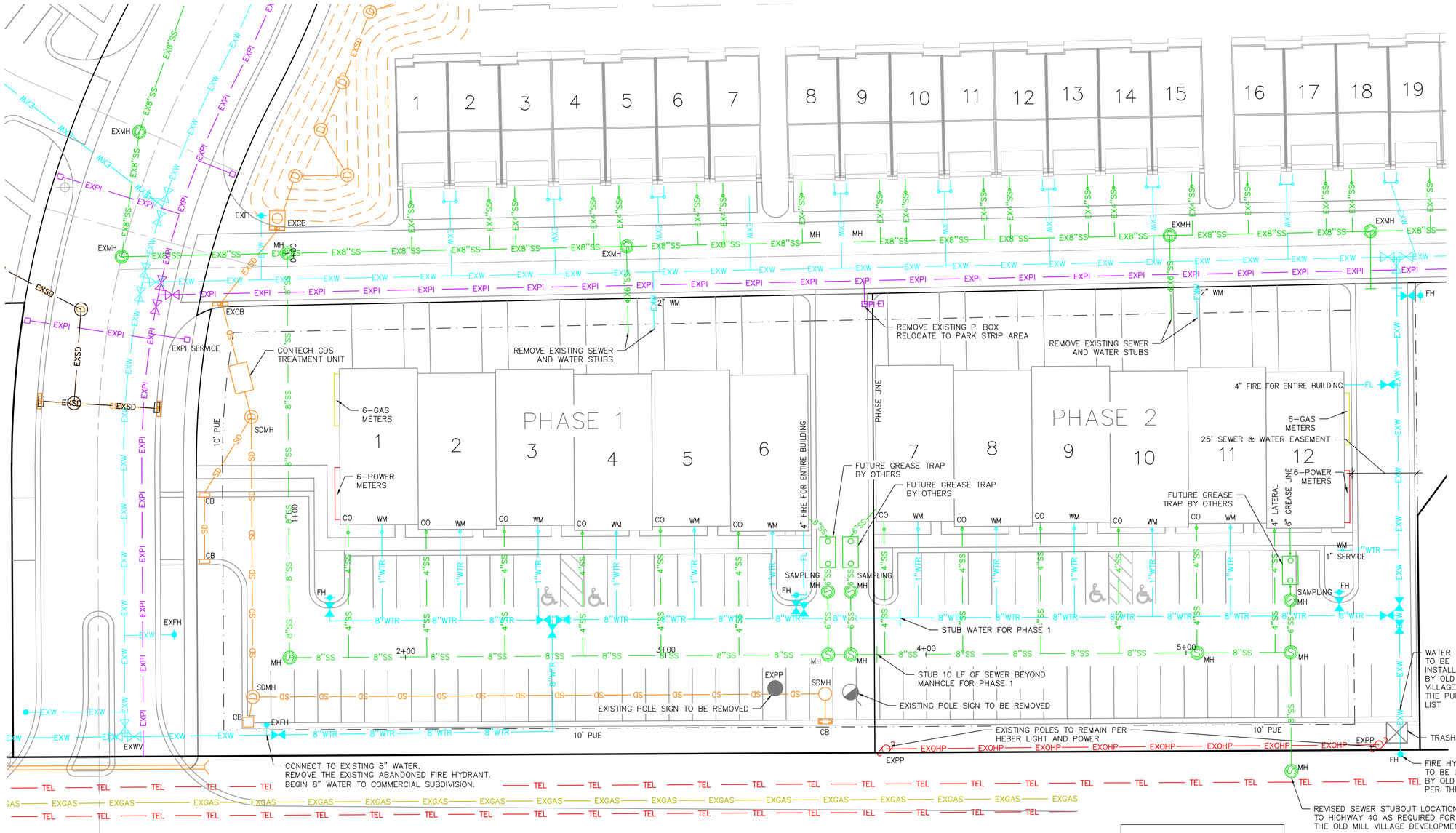

LEGEND

- EX8"SS — EXISTING 8" SEWER
- 4"SS — PROPOSED 4" SEWER LATERAL
- 6"SS — PROPOSED 6" SEWER
- EXW — EXISTING WATER
- 1"WTR — PROPOSED 1" WATER SERVICE
- FL — PROPOSED 4" WATER FIRE SERVICE
- 8"WTR — PROPOSED 8" WATER
- EXPI — EXISTING PRESSURIZED IRRIGATION
- PI — PROPOSED PRESSURIZED IRRIGATION
- EXSD — EXISTING STORM DRAIN
- SD — PROPOSED STORM DRAIN
- TEL — EXISTING COMMUNICATIONS LINE
- EXGAS — EXISTING GAS
- EXOHP — EXISTING OVERHEAD POWER
- FH — FIRE HYDRANT
- WM — WATER METER

BLUE STAKE NOTE:
- LOCATION OF EXISTING UTILITIES SHOWN ON PLAN ARE APPROXIMATE AND MAY BE INCOMPLETE. CONTRACTOR IS RESPONSIBLE FOR BLUE STAKING OF UTILITIES.

SEWER NOTES:
- ALL SEWER LATERALS ARE 4"
- ALL SEWER IMPROVEMENTS SHALL MEET HEBER CITY STANDARDS AND SPECIFICATIONS

WATER NOTES:
- ALL WATER IMPROVEMENTS SHALL MEET HEBER CITY STANDARDS AND SPECIFICATIONS.
- ALL WATER MAIN LINES ARE C-900 DR 18 PIPELINES.

FIRE LINES:
- EACH UNIT HAS A 4" LINE FOR FIRE SPRINKLERS. A 8"X4" TEE SHALL BE INSTALLED ON THE WATER MAIN WITH A 4" GATE VALVE AFTER THE TEE FOR ALL FIRE SPRINKLER LINES.

PRESSURIZED IRRIGATION NOTES:
- ALL PRESSURIZED IRRIGATION IMPROVEMENTS SHALL MEET HEBER CITY STANDARDS AND SPECIFICATIONS.
- ALL PRESSURIZED IRRIGATION MAIN SHALL BE AWWA C900 DR18 PURPLE PIPE.

STORM DRAIN NOTE:
- ALL STORM DRAIN CONSTRUCTION TO MEET HEBER CITY STANDARDS.

POWER, GAS AND PHONE NOTES:
- OWNER AND CONTRACTOR ARE RESPONSIBLE TO OBTAIN THE FINAL DESIGN FOR POWER, GAS AND PHONE UTILITIES FROM THE UTILITY COMPANIES.
- CONTRACTOR IS RESPONSIBLE TO COORDINATE POWER, GAS AND PHONE UTILITY TRENCHES TO EACH UNIT. ONLY LOCATIONS FOR WATER, SEWER AND IRRIGATION ARE SHOWN ON THIS PLAN.

TYPICAL COMMERCIAL UNIT
SCALE: 1" = 20'

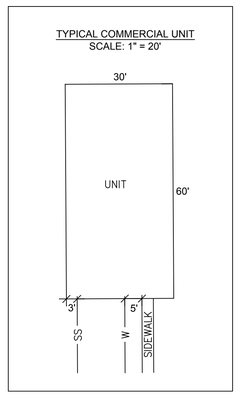

STATE OF UTAH
PAUL D. BERG
LICENSED PROFESSIONAL ENGINEER
7 May 2024

HEBER CITY ENGINEER ACCEPTANCE

RUSSELL FUNK DATE

JURA HOLDINGS
OLD MILL VILLAGE

OVERALL UTILITY PLAN

BERG ENGINEERING
380 E Main St. Suite 204
Midway, Ut 84049
ph 435.657.9749

DESIGN BY: PDB
DRAWN BY: SW
DATE: 7 MAY 2024
REV:
SHEET C6

path: X:\Water\Bule - Highway 40\Commercial Subdivision 2023\Final\
file name: C06_OVERALL UTILITY PLAN.dwg | plot date: May 13, 2024 | plotted by: STAGEY-PC

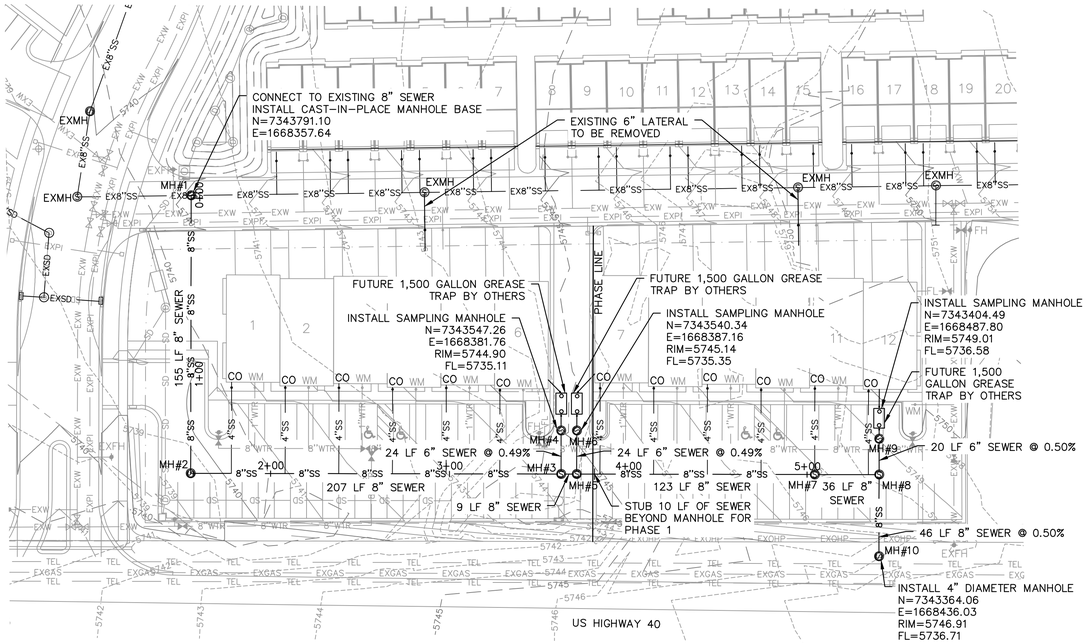

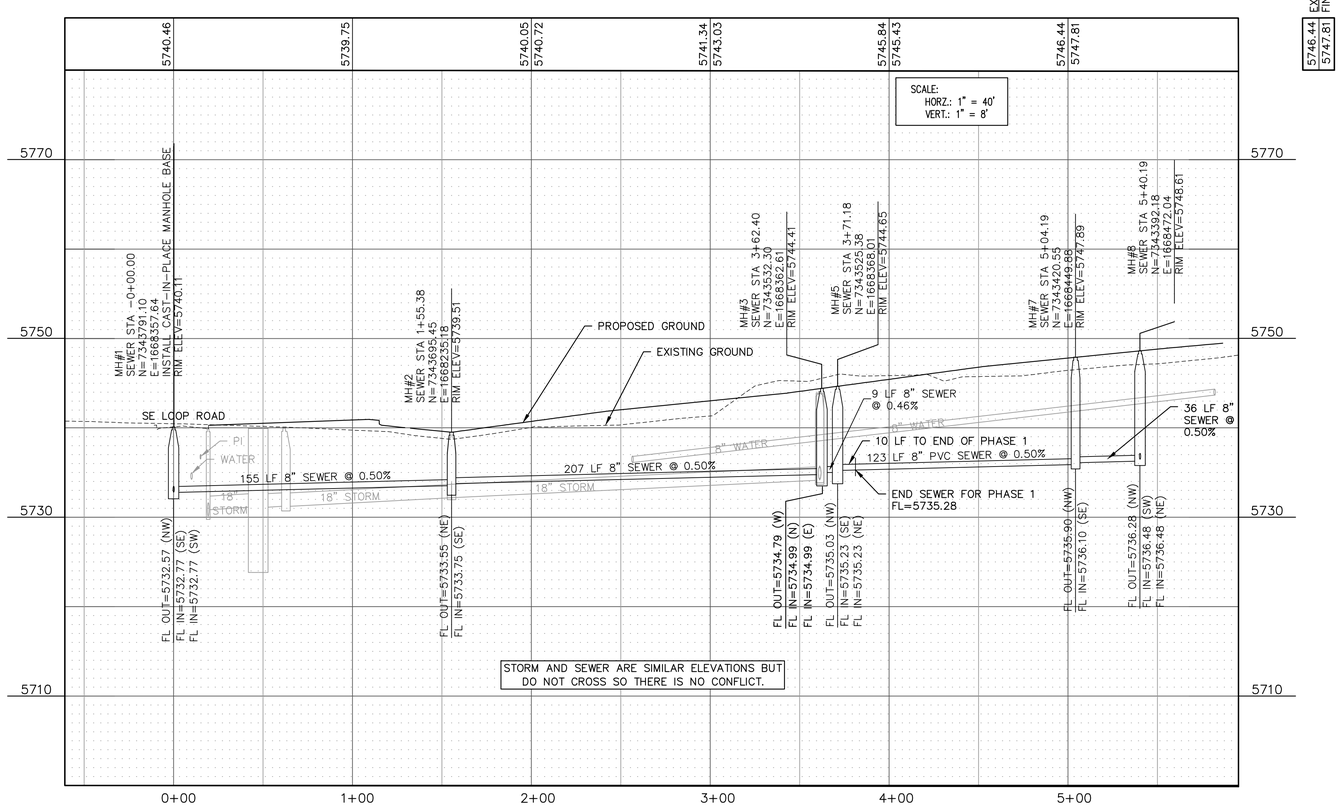

LEGEND

EX8"SS	EXISTING 8" SEWER
4"SS	PROPOSED 4" SEWER LATERAL
6"SS	PROPOSED 6" SEWER
8"SS	PROPOSED 8" SEWER
EXW	EXISTING WATER
1"WTR	PROPOSED 1" WATER SERVICE
FL	PROPOSED 4" WATER FIRE SERVICE
8"WTR	PROPOSED 8" WATER
EXPI	EXISTING PRESSURIZED IRRIGATION
EXSD	EXISTING STORM DRAIN
SD	PROPOSED STORM DRAIN
TEL	EXISTING COMMUNICATIONS LINE
EXGAS	EXISTING GAS
EXPWR	EXISTING OVERHEAD POWER
FH	FIRE HYDRANT
WM	WATER METER

BLUE STAKE NOTE:

- LOCATION OF EXISTING UTILITIES SHOWN ON PLAN ARE APPROXIMATE AND MAY BE INCOMPLETE. CONTRACTOR IS RESPONSIBLE FOR BLUE STAKING OF UTILITIES.

SEWER NOTES:

- ALL SEWER LATERALS ARE 4"
- ALL SEWER IMPROVEMENTS SHALL MEET HEBER CITY STANDARDS AND SPECIFICATIONS

NORTH

0 20 40 80 120

SCALE: 1"=40'

Scale 1" = 80' for 11x17

STATE OF UTAH
PAUL D. BERG
5570
PROFESSIONAL ENGINEER

7 May 2024

HEBER CITY ENGINEER ACCEPTANCE

RUSSELL FUNK DATE

JURA HOLDINGS

OLD MILL VILLAGE

SEWER PLAN & PROFILE

BERG ENGINEERING
380 E Main St. Suite 204
Midway, Ut 84049
ph 435.657.9749

DESIGN BY: PDB DRAWN BY: SW	DATE: 7 MAY 2024 REV:	SHEET C7

path: X:\Weber\Blue - Highway 40\Commercial Subdivision_2023\Final\
file name: 037_SEWER PROF.dwg plot date: May 13, 2024 1:1 plotted by: STACEY-PC

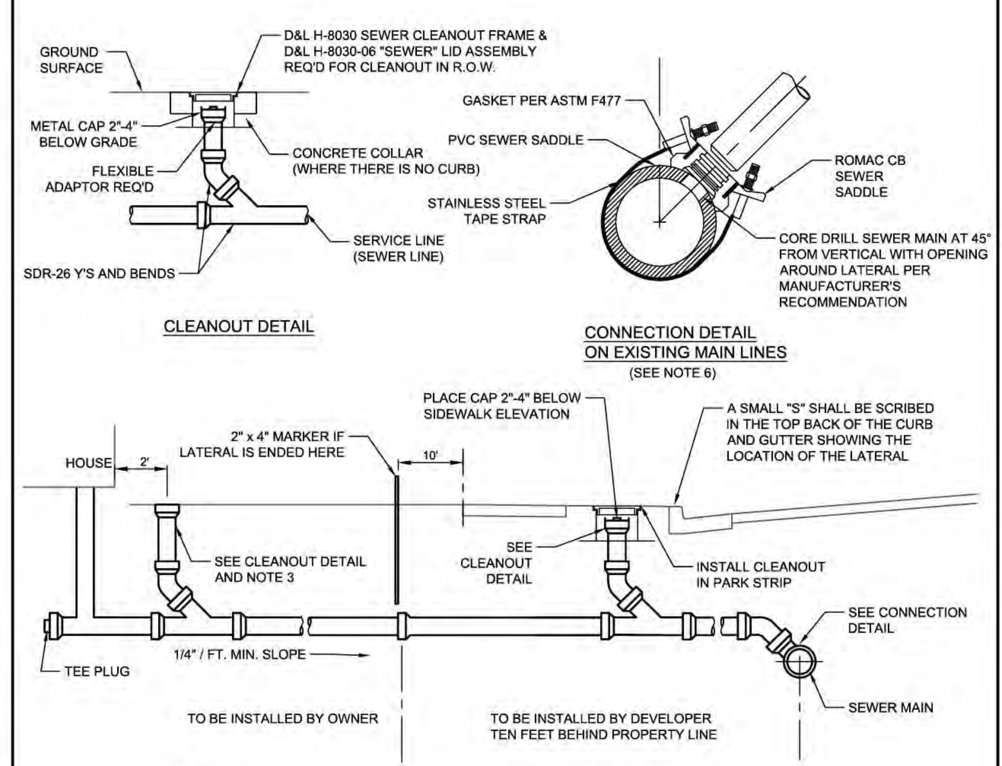

NOTES:

1. PIPE GRAPHICS DO NOT NECESSARILY INDICATE TYPE OF PIPE TO BE USED.
2. ALL PVC SEWER LATERAL PIPE AND FITTINGS WITHIN THE R.O.W. SHALL BE A MINIMUM OF SDR-26.
3. MAXIMUM SPACING BETWEEN CLEANOUTS IS 100' AND AT ALL BENDS.
4. MAXIMUM ALLOWED BEND IN LATERAL IS 22 1/2 DEGREES.
5. SEWER & WATER LATERALS ARE PROHIBITED IN COMMON TRENCH PER STATE CODE R 309-550-7.
6. "INSERTA TEE" MAY BE USED FOR CERTAIN CONDITIONS WITH PRIOR CITY ENGINEER APPROVAL.
7. WHEN APPROVED, "INSERTA TEE" INSTALLATION MUST BE WITNESSED, INSPECTED AND CERTIFIED BY AUTHORIZED CITY AGENTS
8. IN CERTAIN AREAS WHERE CONCERN FOR SEWER BACKUP EXISTS, A SEWER BACKFLOW PREVENTER (RECTORSEAL 97034) SHALL BE REQUIRED.
9. PIPE SLOPE SHALL BE 1/4" / FT MIN.

HEBER CITY — HEART OF THE WASATCH BACK | DATE: 09/23 | SCALE: N.T.S. | 75 NORTH MAIN STREET, HEBER CITY, UTAH 84032, (435) 654-0757

SEWER LATERAL & DETAILS

SEWER-1

H:\Heber City\Std Dwgs\2023 September\Std Dwgs\SEWER-1_Updated.dwg - Lateral - 9/07/2023 03:41pm, natalier

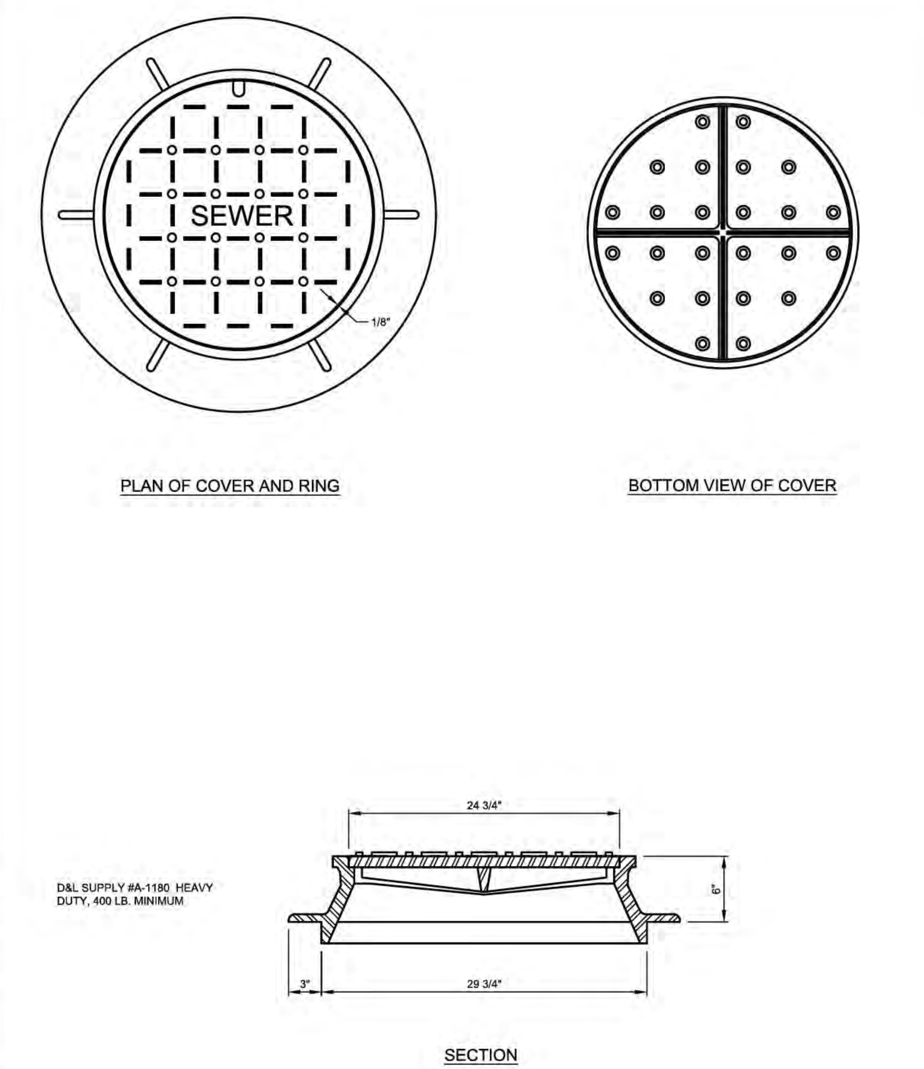

HEBER CITY — HEART OF THE WASATCH BACK | DATE: 03/17 | SCALE: N.T.S. | 75 NORTH MAIN STREET, HEBER CITY, UTAH 84032, (435) 654-0757

MANHOLE RING & COVER

SEWER-2

H:\Heber City\Std Dwgs\2023 September\Std Dwgs\SEWER-2.dwg - Manhole Cover - 9/07/2023 03:41pm, natalier

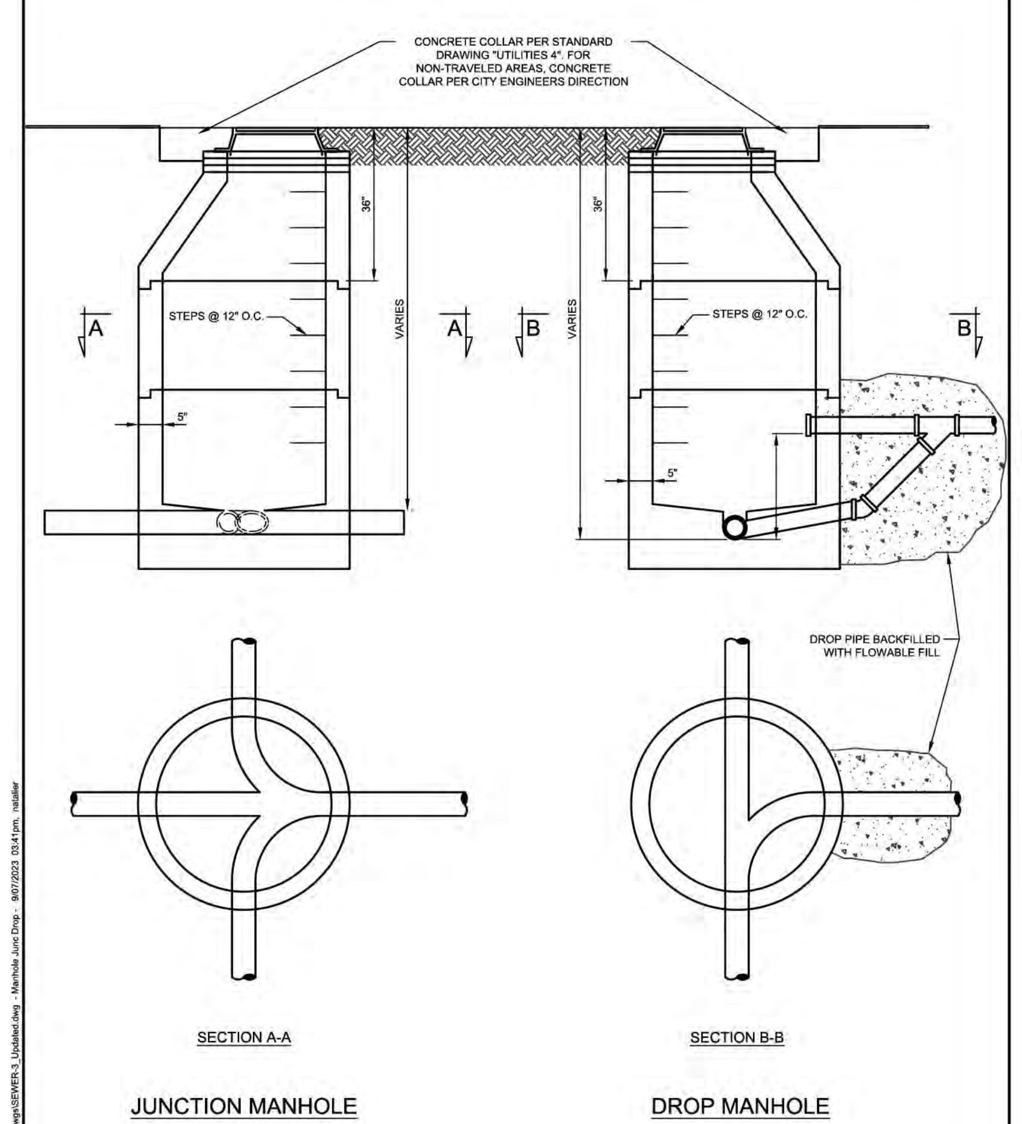

HEBER CITY — HEART OF THE WASATCH BACK | DATE: 09/23 | SCALE: N.T.S. | 75 NORTH MAIN STREET, HEBER CITY, UTAH 84032, (435) 654-0757

JUNCTION & DROP MANHOLES

SEWER-3

H:\Heber City\Std Dwgs\2023 September\Std Dwgs\SEWER-3_Updated.dwg - Manhole Junc Drop - 9/07/2023 03:41pm, natalier

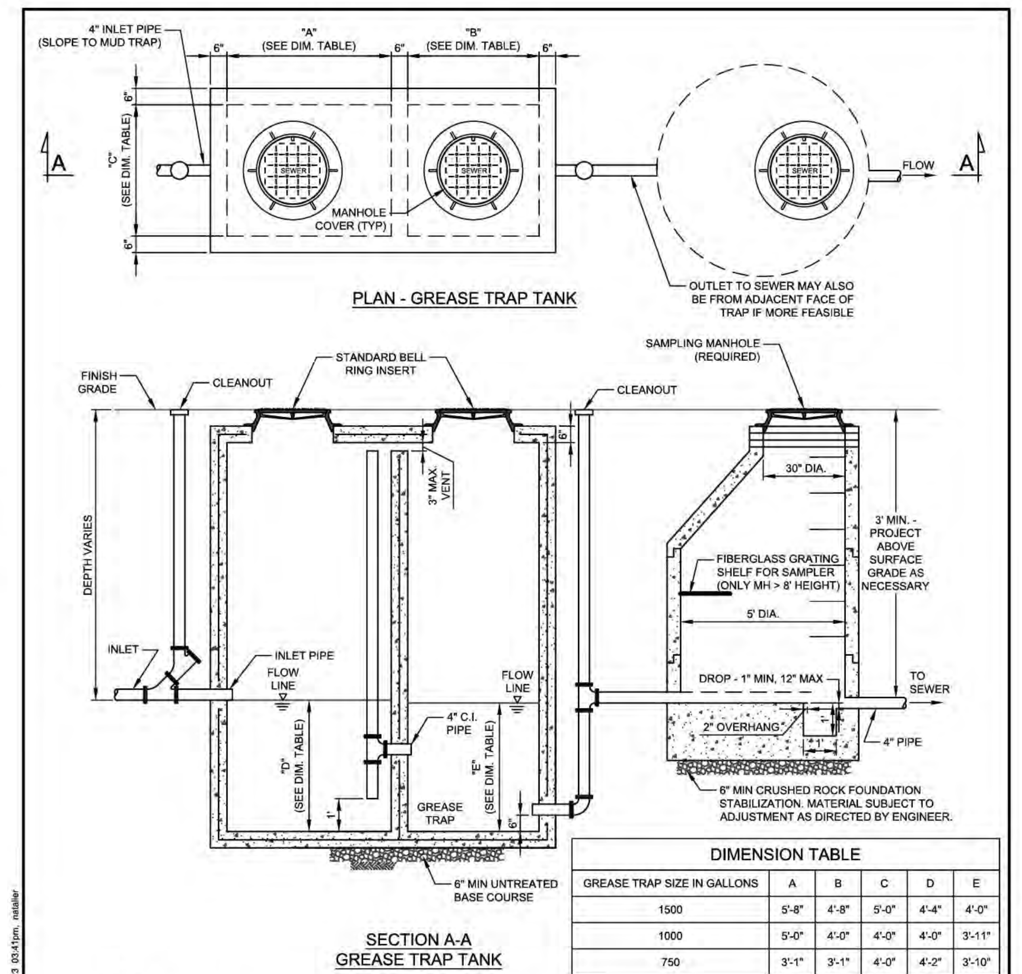

DIMENSION TABLE

GREASE TRAP SIZE IN GALLONS	A	B	C	D	E
1500	5'-8"	4'-8"	5'-0"	4'-4"	4'-0"
1000	5'-0"	4'-0"	4'-0"	4'-0"	3'-11"
750	3'-1"	3'-1"	4'-0"	4'-2"	3'-10"

NOTES:
1. CONCRETE SHALL HAVE A MINIMUM 28 DAY COMPRESSIVE STRENGTH OF 4000 PSI.
2. REINFORCING STEEL SHALL BE ASTW A615 GRADE 60.
3. THE CONCRETE COVER OVER THE REINFORCING STEEL SHALL BE A MINIMUM OF 1½ INCHES.
4. THE STRUCTURE SHALL BE DESIGNED AND STAMPED BY A REGISTERED PROFESSIONAL ENGINEER LICENSED IN THE STATE OF UTAH.
5. THE STRUCTURE SHALL BE DESIGNED FOR THE FOLLOWING LOADING CRITERIA:
   A. WALLS DESIGNED FOR A SATURATED EQUIVALENT FLUID AT-REST SOIL PRESSURE OF 120 PCF PLUS TRUCK SURCHARGE.
   B. TRUCK LOADING USING AN AASHTO H-20 TRUCK LOAD.
6. THE MANWAY FRAME AND COVER SHALL BE A TRAFFIC TYPE CASTING FOR H-20 TRUCK LOAD.
7. WHERE THE SEWER LINE ALREADY EXISTS, THE SEWER INVERT INTO AND OUT OF THE TANK SHALL BE 4'-0" ABOVE THE TANK FLOOR.
8. PLUMBING OUTSIDE OF THE GREASE INTERCEPTOR WILL BE IN ACCORDANCE TO LOCAL REGULATIONS.
9. THE BAFFLE INSIDE THE INTERCEPTOR SHALL BE WITHIN 3 INCHES OF THE CEILING.
10. COVERS SHALL BE CIRCULAR AND SHALL BE SOLID WITH PICK HOLES FOR REMOVAL.
11. THE INLET PIPE SHALL BE AT AN ELEVATION OF 1 INCH OR HIGHER THAN THE OUTLET PIPE.
12. SANITARY WASTES FROM TOILETS SHALL NOT BE PLUMBED TO GREASE INTERCEPTORS.
13. PIPING AS PER CITY OR SANITARY DISTRICT REQUIREMENTS.
14. PROVIDE A SEPARATE VENT LINE AS REQUIRED BY THE INTERNATIONAL PLUMBING CODE.

HEBER CITY — HEART OF THE WASATCH BACK | DATE: 02/19 | SCALE: N.T.S. | 75 NORTH MAIN STREET, HEBER CITY, UTAH 84032, (435) 654-0757

GREASE INTERCEPTOR

SEWER-6

H:\Heber City\Std Dwgs\2023 September\Std Dwgs\SEWER-6.dwg - Grease Interceptor - 9/07/2023 03:41pm, natalier

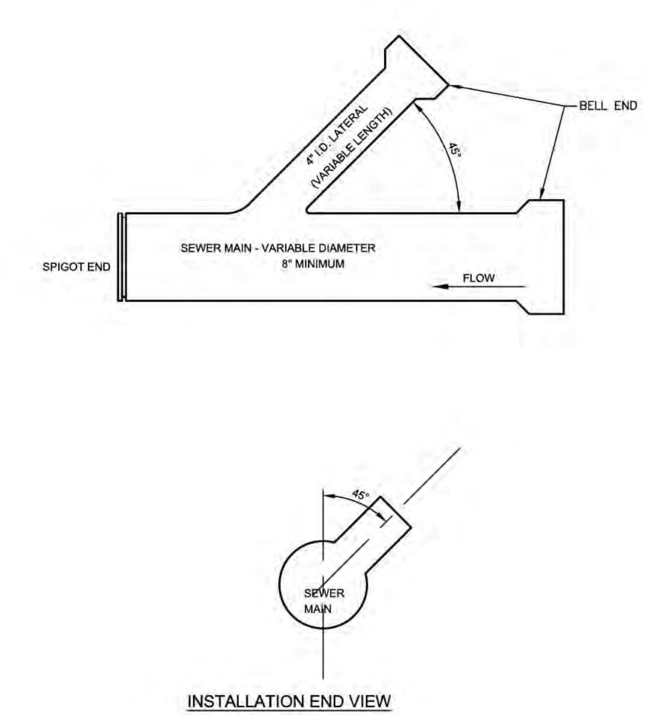

REQUIRED ON ALL NEW SEWER MAIN CONSTRUCTION

HEBER CITY — HEART OF THE WASATCH BACK | DATE: 03/17 | SCALE: N.T.S. | 75 NORTH MAIN STREET, HEBER CITY, UTAH 84032, (435) 654-0757

FABRICATED SEWER LATERAL

SEWER-4

H:\Heber City\Std Dwgs\2023 September\Std Dwgs\SEWER-4.dwg - Lateral Prefab - 9/07/2023 03:41pm, natalier

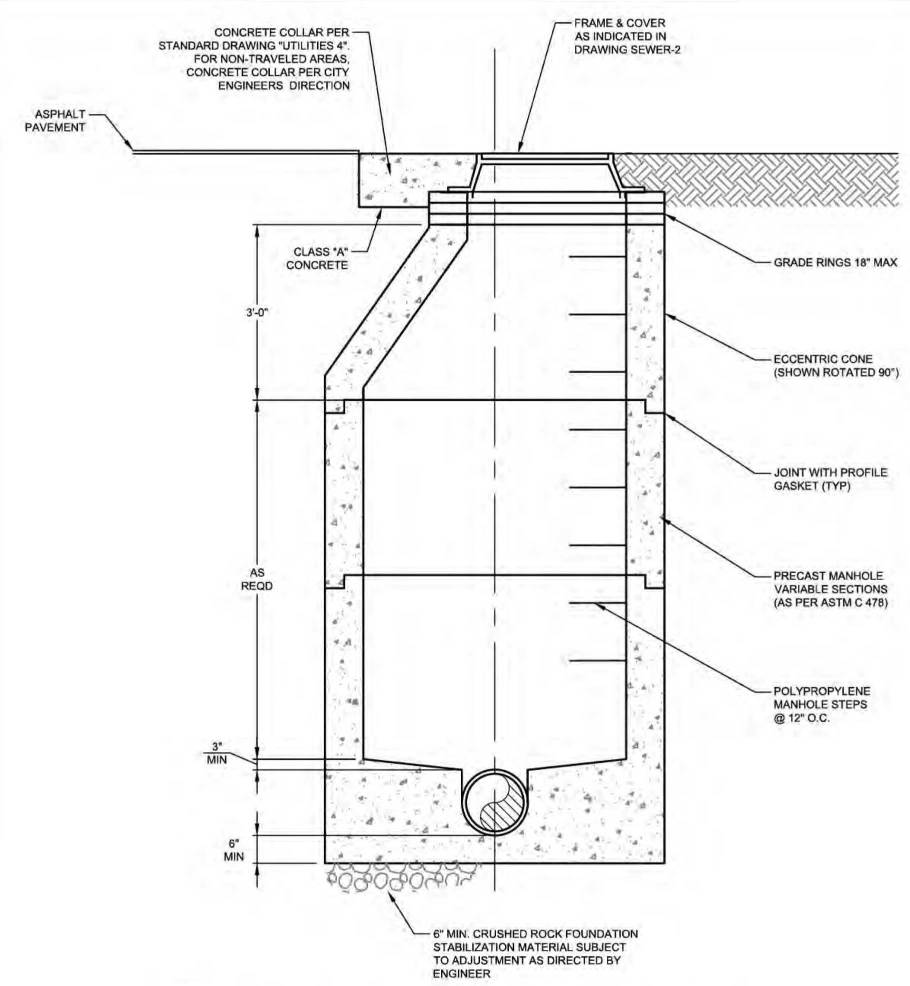

NOTES:
1. LOCATE MANHOLE COVER ON SIDE OF MANHOLE AS SHOWN ABOVE. SET MANHOLE FRAME IN GROUT.
2. ALL MANHOLES TO BE WATER TIGHT AND TESTED AS PER STD. SPEC. 02660.
3. MANHOLE BASE AND 1ST SECTION OF MANHOLE TO BE FABRICATED AS AN INTEGRAL UNIT.

HEBER CITY — HEART OF THE WASATCH BACK | DATE: 09/23 | SCALE: N.T.S. | 75 NORTH MAIN STREET, HEBER CITY, UTAH 84032, (435) 654-0757

PRE-CAST CONCRETE SEWER MANHOLE

SEWER-5

H:\Heber City\Std Dwgs\2023 September\Std Dwgs\SEWER-5 Updated.dwg - Manhole Precast - 9/07/2023 03:41pm, natalier

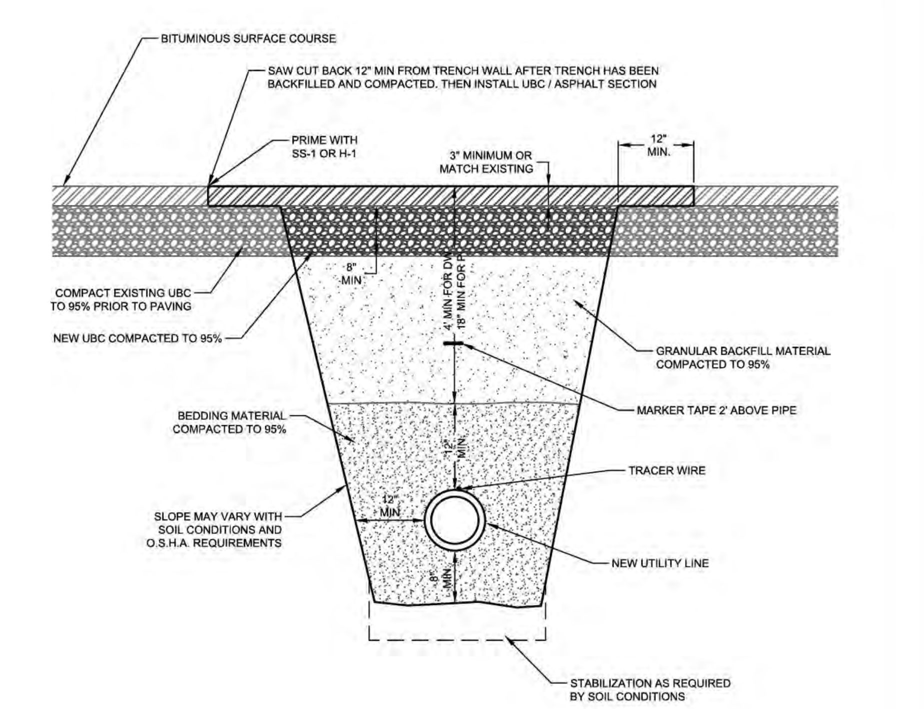

NOTES:
1. COMPACTED BEDDING MATERIAL SHALL NORMALLY CONSIST OF BEDDING SAND.
2. IF APPROVED BY CITY ENGINEER, 3/4" DRAIN ROCK MAY BE USED FOR BEDDING MATERIAL AND SHALL BE WRAPPED IN APPROVED FILTER FABRIC (SEE HEBER CITY SPECIFICATION 02772.2.02), UNLESS OTHERWISE APPROVED.
3. MATERIALS, METHOD & COMPACTION SHALL BE APPROVED BY ENGINEER.
4. USE OF PEA GRAVEL OR COURSE SAND FOR BEDDING MATERIAL IS PROHIBITED UNLESS OTHERWISE APPROVED BY THE CITY ENGINGEER.
5. USE OF NATIVE MATERIAL FOR BACKFILL IS PROHIBITED (EXCEPT AS APPROVED BY THE CITY ENGINEER WITH FULL TIME TESTING AND INSPECTION).
6. USE PROPER MARKER TAPE AS APPROVED BY CITY ENGINEER.
7. INSTALL TRACER WIRE AS PER WATER-5.
8. FLOWABLE FILL IS PROHIBITED AS BACKFILL MATERIAL UNLESS OTHERWISE APPROVED BY CITY ENGINEER. WHEN APPROVED, SURFACE FINISHES MUST STILL BE MATCHED.

HEBER CITY — HEART OF THE WASATCH BACK | DATE: 09/23 | SCALE: N.T.S. | 75 NORTH MAIN STREET, HEBER CITY, UTAH 84032, (435) 654-0757

UTILITY INSTALLATION TRENCH DETAIL

UTIL-1

H:\Heber City\Std Dwgs\2023 September\Std Dwgs\UTILITIES-1 Updated.dwg - Trench - 9/07/2023 03:43pm, natalier

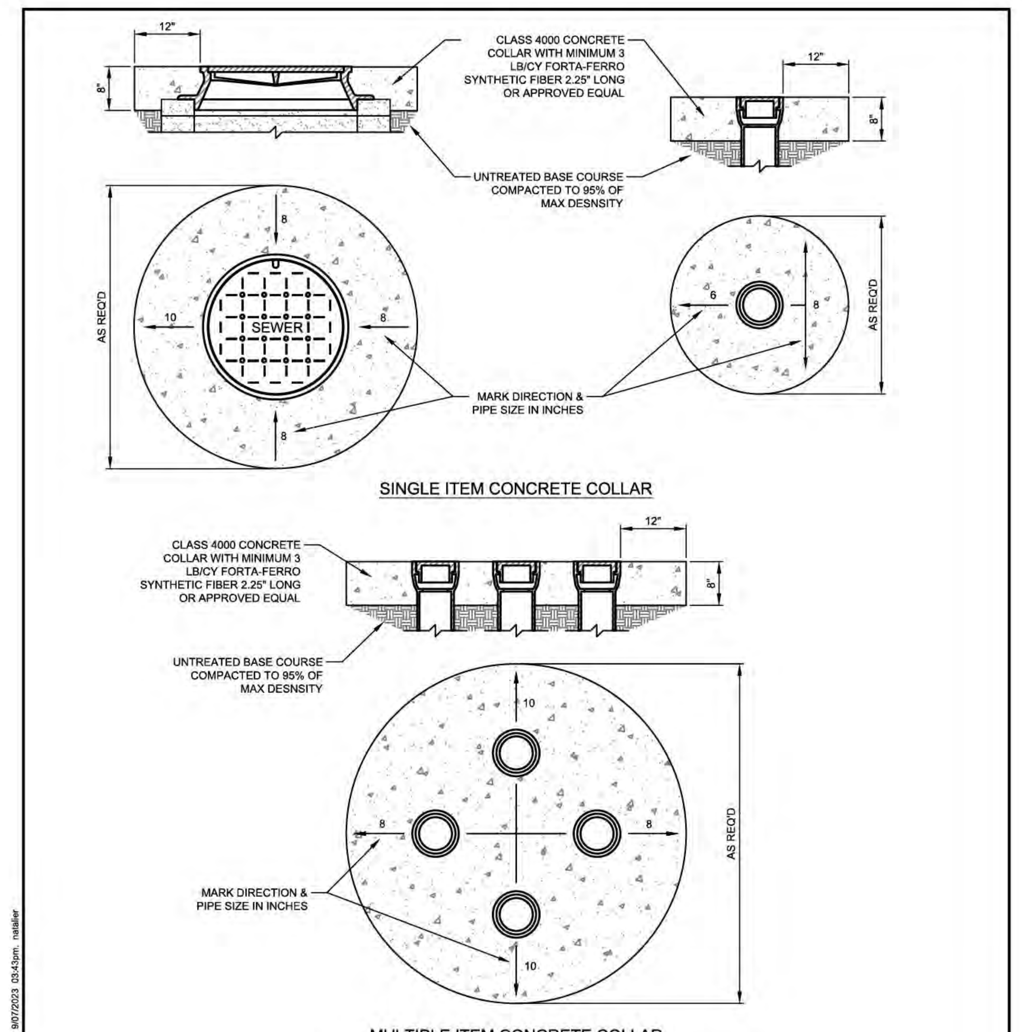

NOTES:
1. NEW AND EXISTING VALVE BOXES AND OTHER SIMILAR ITEMS SHALL BE ADJUSTED TO GRADE AFTER PAVING IS COMPLETE.
2. THE SURFACE OF THE ADJUSTED RING SHALL MATCH THE GRADE OF THE CONCRETE COLLAR. THE CONCRETE COLLAR SHALL BE 1/4" to 3/8" BELOW THE ADJACENT PAVED SURFACE.
3. ASPHALT SHALL BE CUT IN STRAIGHT VERTICAL LINES AT COLLAR EDGES.
4. MARK CONCRETE COLLAR WITH DIRECTION ARROW AND PIPE SIZE IN INCHES.
5. SIZES AND CONFIGURATIONS FOR EXAMPLE ONLY. SHOW ACTUAL CONFIGURATION FOR EACH SITUATION.
6. WHERE WHIRLYGIG SYSTEMS (OR EQUAL) ARE USED TO BRING MANHOLE COLLARS TO GRADE IN PLACE OF CONCRETE GRADE RINGS, THE CONCRETE COLLAR SHALL EXTEND ALL THE WAY TO THE CONE OR HIGHEST MANHOLE SECTION.

HEBER CITY — HEART OF THE WASATCH BACK | DATE: 03/17 | SCALE: N.T.S. | 75 NORTH MAIN STREET, HEBER CITY, UTAH 84032, (435) 654-0757

UTILITY CONCRETE COLLAR

UTILITIES-4

H:\Heber City\Std Dwgs\2023 September\Std Dwgs\UTILITIES-4.dwg - Conc Collar - 9/07/2023 03:43pm, natalier

HEBER CITY ENGINEER ACCEPTANCE

RUSSELL FUNK — DATE

JURA HOLDINGS

OLD MILL VILLAGE

SEWER CONSTRUCTION DETAILS

BERG ENGINEERING
380 E Main St. Suite 204
Midway, Ut 84049
ph 435.657.9749

DESIGN BY: PDB | DATE: 7 MAY 2024 | SHEET C8
DRAWN BY: SW | REV:

path: X:\Heber\Buie - Highway 40\Commericial Subdivision_2023\Final\ | plotted by: STACEY-PC
file name: C08_SEWER_DETAILS.dwg | plot date: May 07, 2024

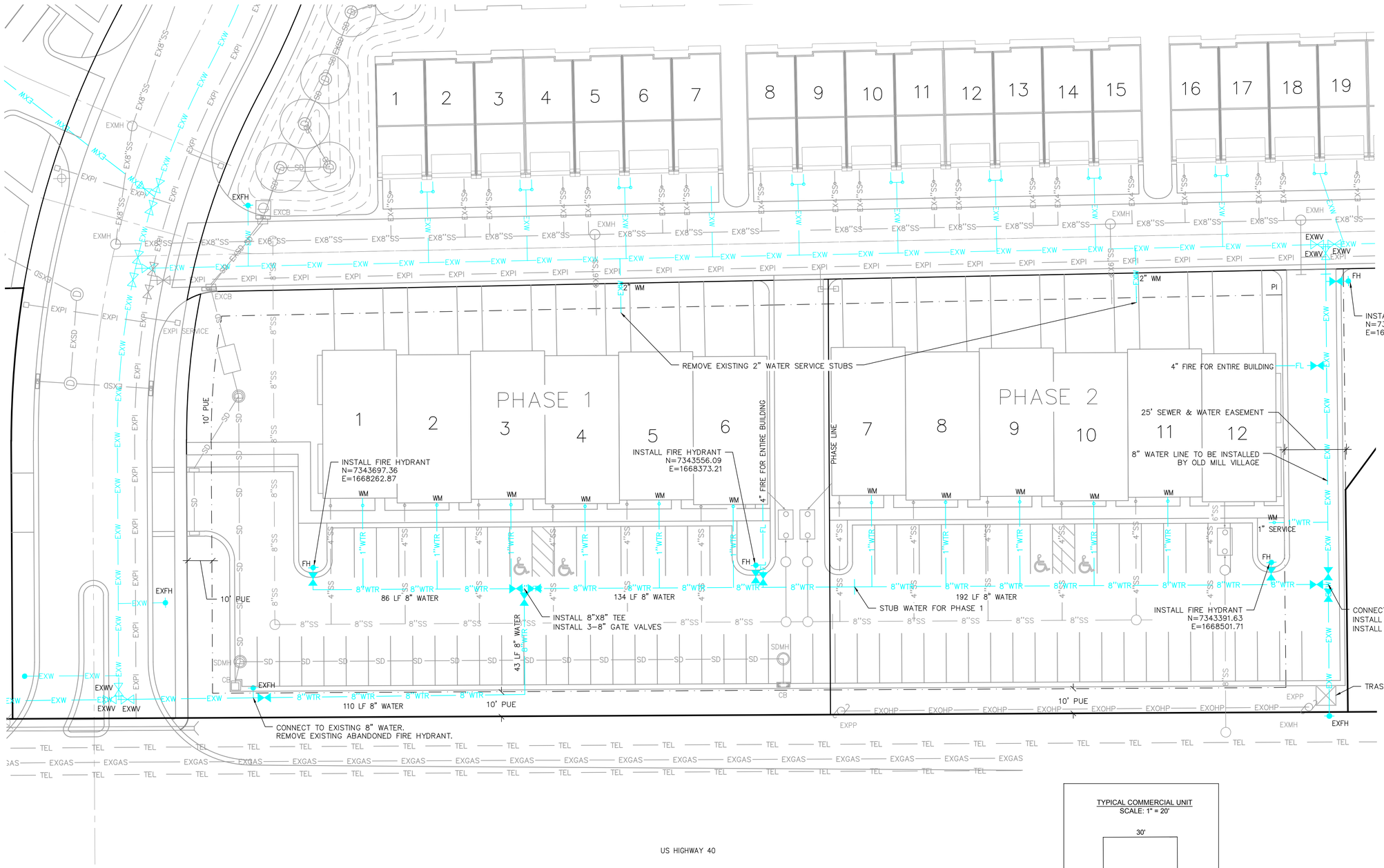

LEGEND

EX8"SS	EXISTING 8" SEWER
4"SS	PROPOSED 4" SEWER LATERAL
6"SS	PROPOSED 6" SEWER
EXW	EXISTING WATER
1"WTR	PROPOSED 1" WATER SERVICE
FL	PROPOSED 4" WATER FIRE SERVICE
8"WTR	PROPOSED 8" WATER
EXPI	EXISTING PRESSURIZED IRRIGATION
PI	PROPOSED PRESSURIZED IRRIGATION
EXSD	EXISTING STORM DRAIN
SD	PROPOSED STORM DRAIN
TEL	EXISTING COMMUNICATIONS LINE
EXGAS	EXISTING GAS
EXOHP	EXISTING OVERHEAD POWER
FH	FIRE HYDRANT
WM	WATER METER

BLUE STAKE NOTE:

- LOCATION OF EXISTING UTILITIES SHOWN ON PLAN ARE APPROXIMATE AND MAY BE INCOMPLETE. CONTRACTOR IS RESPONSIBLE FOR BLUE STAKING OF UTILITIES.

WATER NOTES:

- ALL WATER IMPROVEMENTS SHALL MEET HEBER CITY STANDARDS AND SPECIFICATIONS.
- ALL WATER MAIN LINES ARE C-900 DR 18 PIPELINES.

FIRE LINES:

- EACH UNIT HAS A 4" LINE FOR FIRE SPRINKLERS. A 8"X4" TEE SHALL BE INSTALLED ON THE WATER MAIN WITH A 4" GATE VALVE AFTER THE TEE FOR ALL FIRE SPRINKLER LINES.

TYPICAL COMMERCIAL UNIT
SCALE: 1" = 20'

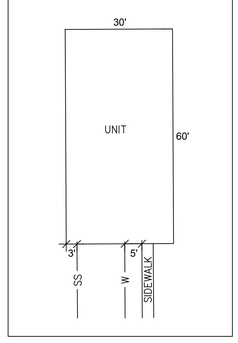

STATE OF UTAH
PAUL D. BERG
PROFESSIONAL ENGINEER
7 May 2024

HEBER CITY ENGINEER ACCEPTANCE

RUSSELL FUNK DATE

JURA HOLDINGS
OLD MILL VILLAGE

WATER PLAN

BERG ENGINEERING
380 E Main St. Suite 204
Midway, Ut 84049
ph 435.657.9749

DESIGN BY: PDB	DATE: 7 MAY 2024	SHEET
DRAWN BY: SW	REV:	C9

path: X:\Heber\Bills - Highway 40\Commercial Subdivision 2023\Dwg\
file name: 030_WATER PLAN.dwg plot date: May 13, 2024 plotted by: STACEY-PC

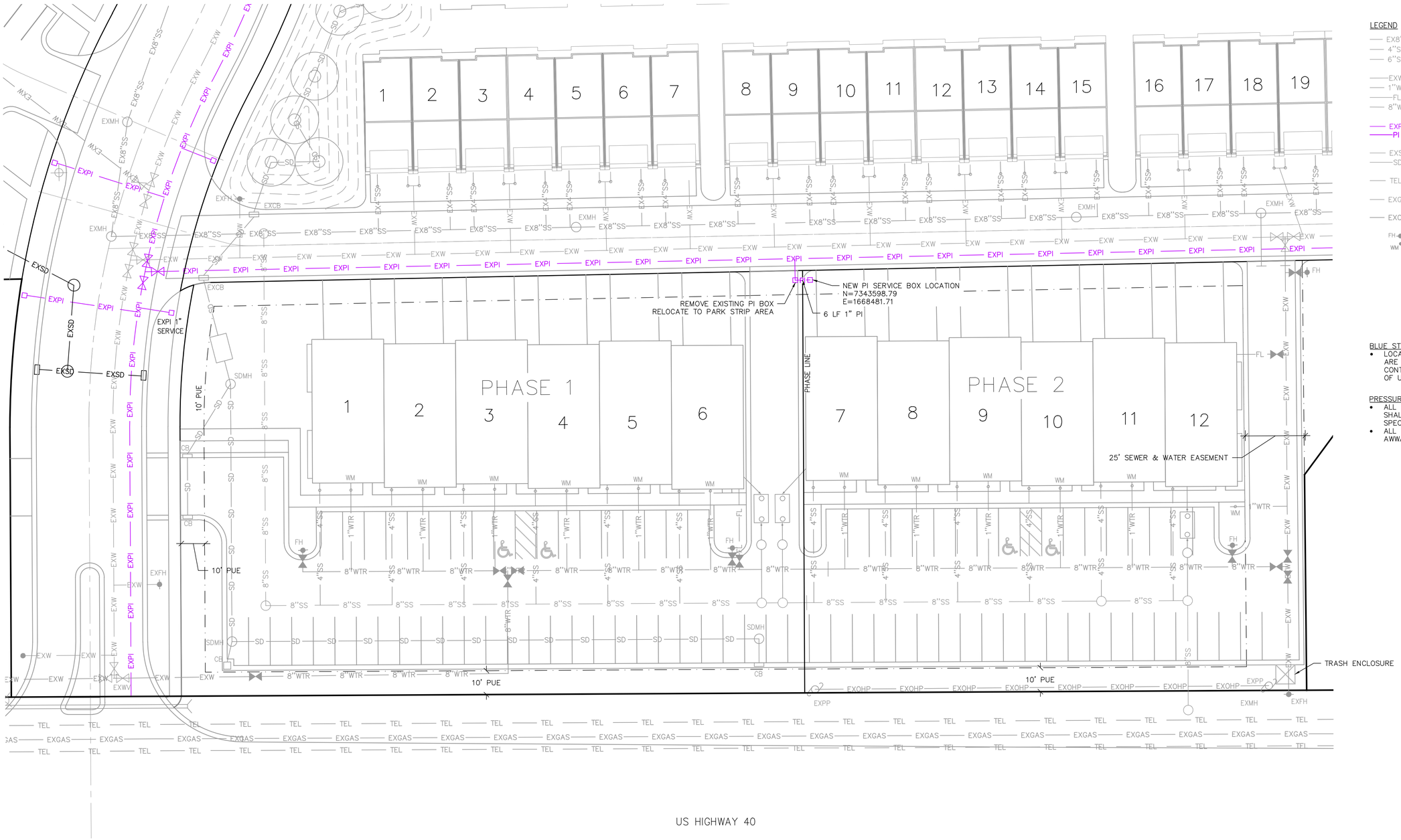

LEGEND

EX8"SS	EXISTING 8" SEWER
4"SS	PROPOSED 4" SEWER LATERAL
6"SS	PROPOSED 6" SEWER
EXW	EXISTING WATER
1"WTR	PROPOSED 1" WATER SERVICE
FL	PROPOSED 4" WATER FIRE SERVICE
8"WTR	PROPOSED 8" WATER
EXPI	EXISTING PRESSURIZED IRRIGATION
PI	PROPOSED PRESSURIZED IRRIGATION
EXSD	EXISTING STORM DRAIN
SD	PROPOSED STORM DRAIN
TEL	EXISTING COMMUNICATIONS LINE
EXGAS	EXISTING GAS
EXOHP	EXISTING OVERHEAD POWER
FH	FIRE HYDRANT
WM	WATER METER

BLUE STAKE NOTE:

- LOCATION OF EXISTING UTILITIES SHOWN ON PLAN ARE APPROXIMATE AND MAY BE INCOMPLETE. CONTRACTOR IS RESPONSIBLE FOR BLUE STAKING OF UTILITIES.

PRESSURIZED IRRIGATION NOTES:

- ALL PRESSURIZED IRRIGATION IMPROVEMENTS SHALL MEET HEBER CITY STANDARDS AND SPECIFICATIONS.
- ALL PRESSURIZED IRRIGATION MAIN SHALL BE AWWA C900 DR18 PURPLE PIPE.

NORTH

0 10 20 40 60

SCALE: 1"=20'

STATE OF UTAH
PAUL D. BERG
PROFESSIONAL ENGINEER
7 May 2024

HEBER CITY ENGINEER ACCEPTANCE

RUSSELL FUNK DATE

JURA HOLDINGS

OLD MILL VILLAGE

PRESSURIZED IRRIGATION PLAN

BERG ENGINEERING
380 E Main St. Suite 204
Midway, Ut 84049
ph 435.657.9749

DESIGN BY: PDB DRAWN BY: SW	DATE: 7 MAY 2024 REV:	SHEET C10

path: X:\Heber\Blue - Highway 40\Commercial Subdivision 2023\Final\
file name: C10_PI PLAN.dwg | plot date: May 13, 2024 | plotted by: STACEY-PC

IRRIGATON SERVICE - ONE LOT (IRR-1B)

TABLE 1			
SERVICE LINE SIZE	MIN. BOX SIZE	BOX MODEL	LID / FRAME MODEL
1" MINIMUM	18" x 18"	SEE APPENDIX FOR ALTERNTIVES	SEE APPENDIX FOR ALTERNATIVES
1.5"	27" x 24"	500IS2724FAB000666N	DFW18MR-1BF1 SML IRR / 700098-1
2"	36" x 36"	550IS3636FAB000666N	SAME AS ABOVE w/ 790138 EXP RING

NOTE 1: FOR LARGER SIZES CONTACT PUBLIC WORKS FOR REQUIREMENTS.
NOTE 2: SEE APPENDIX A FOR ADDITIONAL APPROVED ALTERNATES.

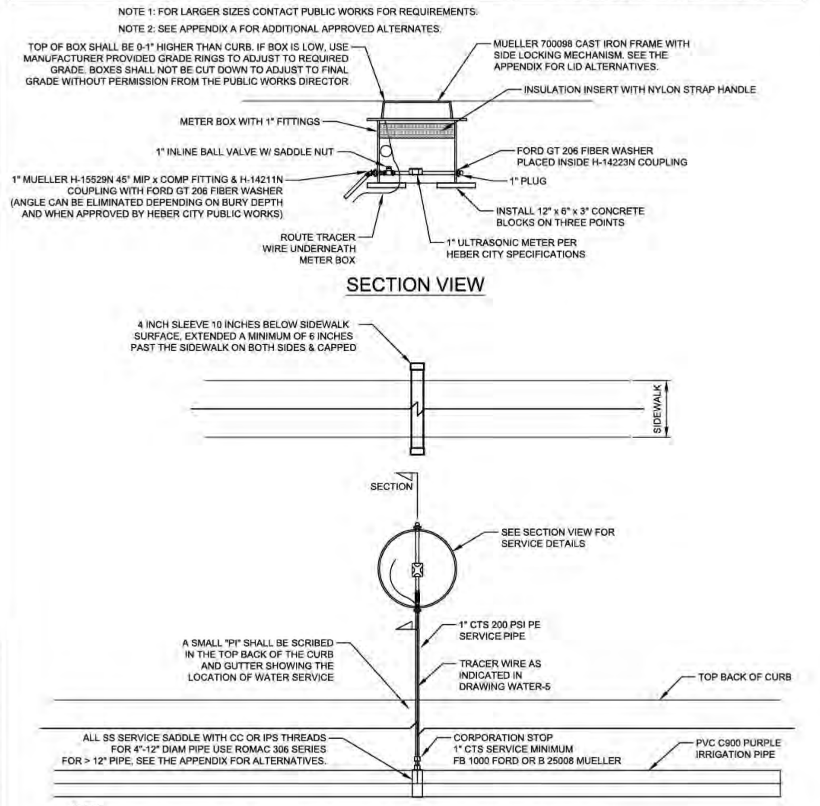

NOTES:
1. ALL COMPONENTS SHOWN TO BE FURNISHED AND INSTALLED BY DEVELOPER AND CONFORM TO AWWA C800.
2. ALL BOXES SHALL BE EQUIPPED WITH UNIONS.
3. STAINLESS STEEL STIFFENERS ON ALL POLY CONNECTIONS.
4. METER BOXES ALLOWED WITHIN DRIVEWAY ZONE ONLY WITH PRIOR APPROVAL FROM PUBLIC WORKS DIRECTOR.
5. WHEN METER BOXES ARE INSTALLED WITHIN DRIVEWAY ZONES OR WITHIN OTHER PAVED SURFACES, DIFFERENT TRAFFIC RATED LIDS & FRAMES MAY BE REQUIRED PER THE DIRECTION OF THE PUBLIC WORKS DIRECTOR.
6. IRRIGATION METER CAN TO BE LOCATED IN THE MIDDLE OF THE PLANTER STRIP OR BETWEEN SIDEWALK AND PROPERTY LINE (FOR COMBINATION SIDEWALK) OR AS DIRECTED BY ENGINEER. 4" SLEEVE REQUIRED ON ALL INSTALLATIONS INCLUDING EXISTING SIDEWALK.
7. IRRIGATION SERVICE SHOULD CONNECT DIRECTLY TO THE MAIN LINE AND NOT "TEE" OFF OF SERVICE LINES.
8. METER CAN SHALL BE COMPLETELY BACKFILLED WITH COMPACTED 3" MINUS GRANULAR MATERIAL FROM TOP TO BOTTOM.
9. BEDDING OF ALL PIPE SHALL CONFORM TO HEBER CITY BEDDING STANDARDS FOR CULINARY WATER.
10. METER FEE WILL BE ASSESSED WITH BUILDING PERMIT OR AT TIME OF METER INSTALLATION.

HEBER CITY — HEART OF THE WASATCH BACK | DATE: 09/23 | SCALE: N.T.S. | 75 NORTH MAIN STREET HEBER CITY, UTAH 84032 (435) 654-0757
IRRIGATON SERVICE - ONE LOT
IRR-1B

FIRE HYDRANTS (WATER-1)

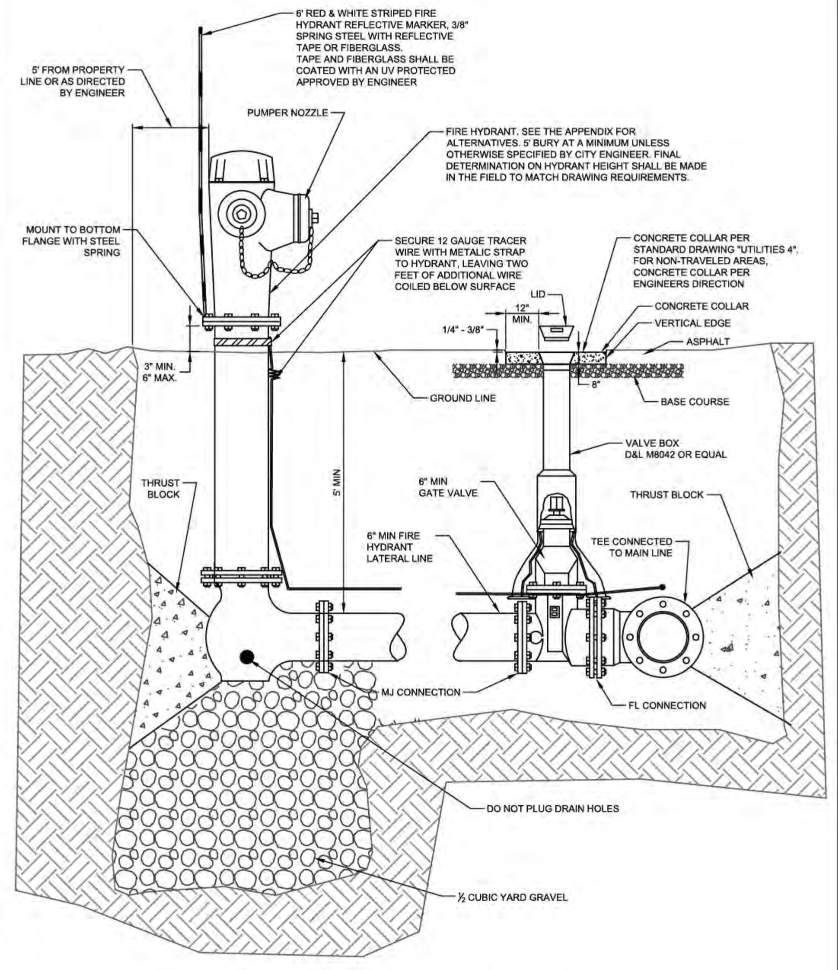

NOTES:
1. FIRE HYDRANT DRAINS SHALL NOT BE CONNECTED TO, OR LOCATED WITHIN, 10 FEET OF SANITARY SEWERS. WHERE POSSIBLE, HYDRANT DRAINS SHALL NOT BE LOCATED WITHIN 10 FEET OF STORM DRAINS.
2. ALL VALVE NUT EXTENSIONS SHALL BE PINNED OR OTHERWISE LOCKED TO THE VALVE NUT.

HEBER CITY — HEART OF THE WASATCH BACK | DATE: 04/22 | SCALE: N.T.S. | 75 NORTH MAIN STREET HEBER CITY, UTAH 84032 (435) 654-0757
FIRE HYDRANTS
WATER-1

TYPICAL PIPE THRUST BLOCKING (WATER-2)

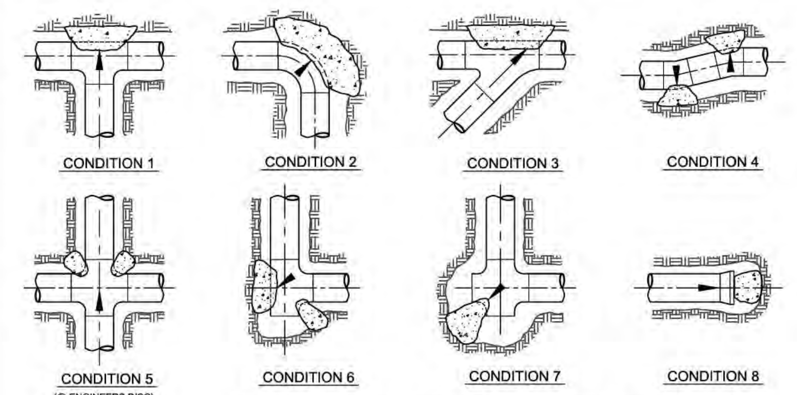

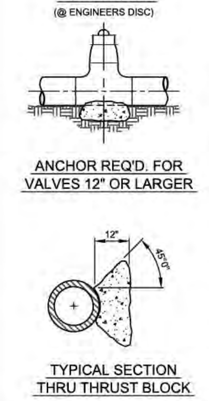

THRUST BLOCK BEARING AREA IN SQ. FT.								
PIPE SIZE	CONDITION							
	1	2	3	4	5	6	7	8
4	2.6	3.3	2.6	1.3	1.3	2.0	3.3	2.6
6	4.6	6.5	3.9	2.0	2.6	3.3	6.5	4.6
8	7.8	11.0	5.9	3.3	3.9	5.9	11.0	7.8
10	12.4	17.5	9.8	5.2	6.5	9.1	17.5	12.4
12	17.5	24.8	13.6	7.8	9.1	12.3	24.8	17.5
14	24.0	33.8	18.2	9.7	12.3	16.9	33.8	24.0
16	31.1	44.0	23.8	12.7	15.5	23.2	44.0	31.1
20	48.6	68.8	37.2	19.8	24.2	36.3	68.8	48.6
24	89.8	90.1	48.8	24.9				

NOTES:
1. ALL THRUST BLOCK BEARING FACES SHALL BE POURED AGAINST UNDISTURBED SOIL OR APPROVED COMPACTED BACKFILL.
2. CONCRETE SHALL BE CLASS 6.0-B-3000.
3. ALL THRUST BLOCK SIDES SHALL BE WOOD FORMED UNLESS OTHERWISE APPROVED.
4. CALCULATED ON 225 LB. TEST PRESSURE AND ALLOWABLE BEARING PRESSURE OF 200 LBS. PER SQUARE FEET.
5. IN POORER SOILS SPECIAL DESIGN IS REQUIRED.
6. VALVE BOLTS, WEEP-HOLES, AND OTHER FITTING APPARATUSES SHALL NOT BE COVERED WITH CONCRETE AND SHALL HAVE A MINIMUM 3" CLEARANCE FROM CONCRETE.
7. ALL THRUST BLOCKS SHALL BE INSPECTED BY AUTHORIZED CITY INSPECTOR PRIOR TO POUR AND PRIOR TO BACKFILL.

HEBER CITY — HEART OF THE WASATCH BACK | DATE: 06/21 | SCALE: N.T.S. | 75 NORTH MAIN STREET HEBER CITY, UTAH 84032 (435) 654-0757
TYPICAL PIPE THRUST BLOCKING
WATER-2

VALVE BOX & COLLARS (WATER-3)

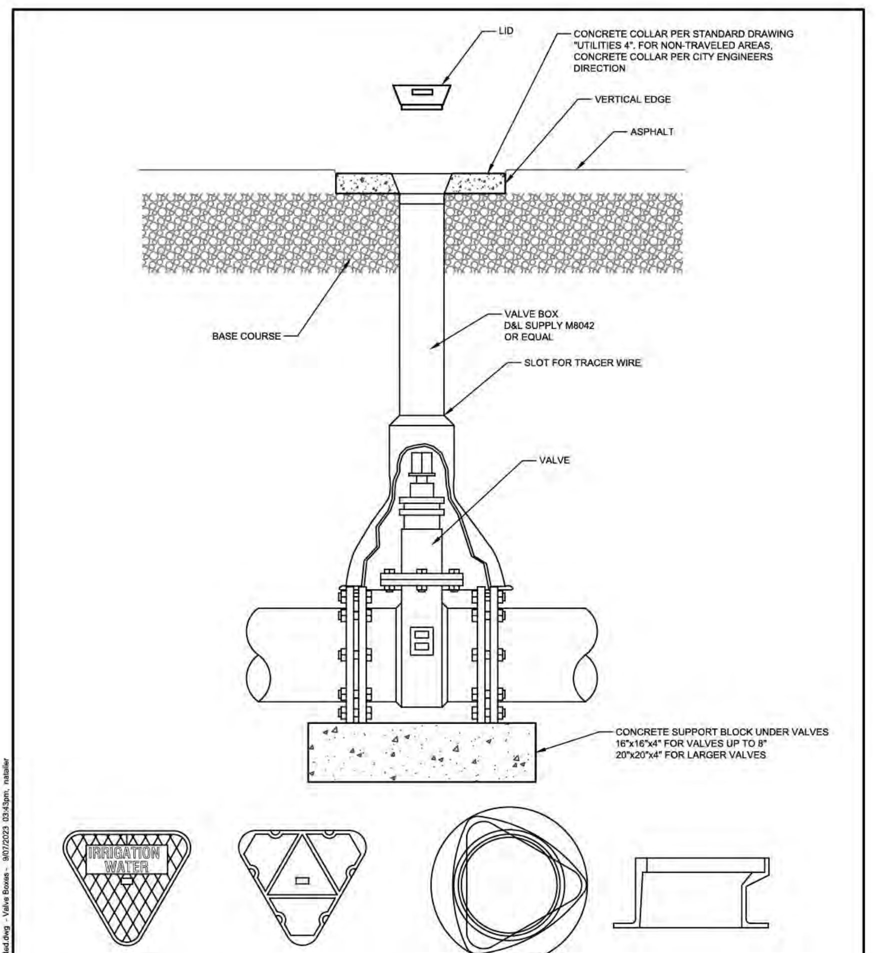

NOTES:
1. ALL IRRIGATION BOXES TO BE INSTALLED USING THE ABOVE LID. REF# M-9009
2. RAISE VALVE BOX TO GRADE AFTER PAVING OPERATIONS ARE COMPLETED.
3. GRIND SMALL SLOT FOR TRACER WIRE TO PASS THROUGH AT FLARE IN VALVE BOX.
4. ALL VALVE NUT EXTENSIONS SHALL BE PINNED OR OTHERWISE LOCKED TO THE VALVE NUT.

HEBER CITY — HEART OF THE WASATCH BACK | DATE: 04/22 | SCALE: N.T.S. | 75 NORTH MAIN STREET HEBER CITY, UTAH 84032 (435) 654-0757
VALVE BOX & COLLARS
WATER-3

1" SERVICE TRENCH (WATER-4)

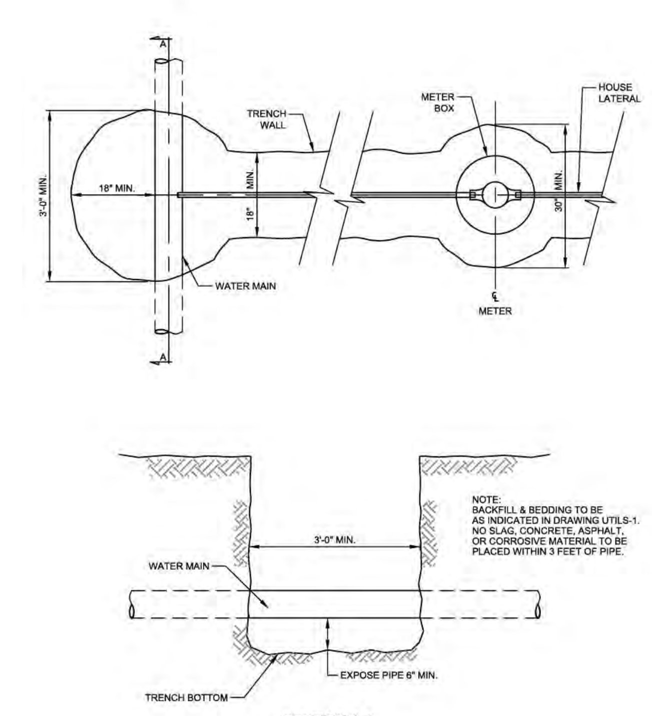

HEBER CITY — HEART OF THE WASATCH BACK | DATE: 03/17 | SCALE: N.T.S. | 75 NORTH MAIN STREET HEBER CITY, UTAH 84032 (435) 654-0757
1" SERVICE TRENCH
WATER-4

TRACER WIRE INSTALLATION (WATER-5)

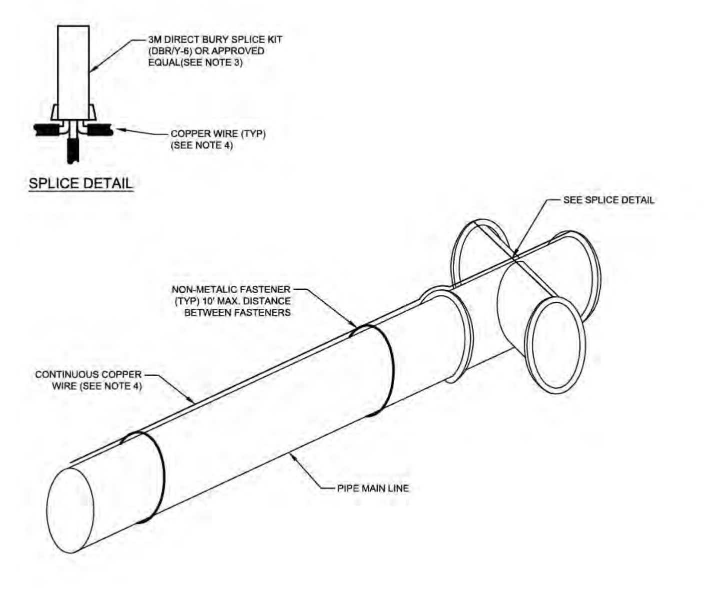

NOTES:
1. COPPER TRACER WIRE TO BE INSTALLED THE LENGTH OF PIPELINE AND EACH CULINARY SERVICE, AND SECONDARY SERVICE, ALONG EACH PRESSURIZED IRRIGATION PIPELINE AND SERVICE. TRACER WIRE TO BE BROUGHT UP IN AT LEAST ONE VALVE IN EACH INTERSECTION. TRACER WIRE TO BE BROUGHT TO THE END OF EACH FIRE HYDRANT ON CULINARY LINES. (NOT TO EXCEED 500 FEET).
2. TRACER WIRE TO BE INSTALLED AND MAINTAINED ON TOP OF PIPE CENTERLINE DURING BACKFILL.
3. SPLICE KIT USED TO ELECTRICALLY CONNECT TWO OR MORE PRESTRIPPED COPPER WIRES AND MOISTURE SEAL THE CONNECTION FOR DIRECT BURIAL. THE KIT SHALL INCLUDE A 3M (OR APPROVED EQUAL) PERFORMANCE PLUS WIRE CONNECTOR AND A HIGH IMPACT, UV RESISTANT POLYPROPYLENE TUBE PREFILLED WITH MOISTURE-RESITANT GREASE.
4. COPPER WIRE SHALL BE #12 AWG SOLID UF TYPE WITH CROSS-LINKED POLYETHYLENE INSULATION RATED TO 600 VOLTS.
5. CONTRACTOR SHALL TEST TRACER WIRE FOR CONTINUITY PRIOR TO PAVING IN THE PRESENCE OF THE ENGINEER.
6. THE TEE/CROSS IS SHOWN WITHOUT VALVES AND IS INTENDED TO SHOW TRACER WIRE ROUTING ONLY.

HEBER CITY — HEART OF THE WASATCH BACK | DATE: 03/17 | SCALE: N.T.S. | 75 NORTH MAIN STREET HEBER CITY, UTAH 84032 (435) 654-0757
TRACER WIRE INSTALLATION
WATER-5

WATER SERVICE - SINGLE LOT (WATER-6B)

TABLE 1					
SERVICE LINE SIZE	MINIMUM METER BOX SIZE	BOX MODEL	FRAME MODEL	COMMENTS	INSULATION INSERTS
1" MINIMUM		SEE THE APPENDIX FOR ALTERNATIVES			790153
1 1/2"	24" x 60"	500VS2460RVB000520N	700098-1	" "	790325
2"	27" x 60"	550VS2760RVB000520N	700098-1	" "	790327

NOTE 1: FOR LARGER SIZES CONTACT PUBLIC WORKS FOR REQUIREMENTS

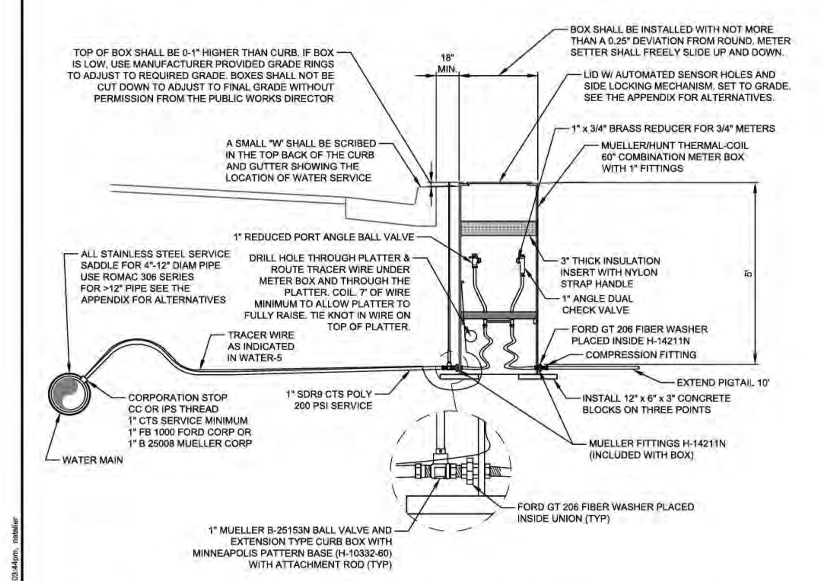

NOTES:
1. METER BOX, COVER, COPPER SETTER, CORPORATION STOP, & SERVICE LINES TO BE FURNISHED AND INSTALLED BY DEVELOPER AND CONFORM TO AWWA C800.
2. STAINLESS STEEL STIFFENERS ON ALL POLY CONNECTIONS.
3. METER BOXES ARE ALLOWED WITHIN DRIVEWAY ZONE ONLY WITH PRIOR APPROVAL FROM PUBLIC WORKS DIRECTOR.
4. WATER METER WILL BE INSTALLED BY HEBER CITY.
5. SEE UTILS-3 FOR PLAN VIEW.
6. WATER METER CAN TO BE LOCATED IN THE MIDDLE OF THE PLANTER STRIP OR BETWEEN SIDEWALK AND PROPERTY LINE (FOR COMBINATION SIDEWALK) OR AS DIRECTED BY ENGINEER.
7. WATER SERVICE SHOULD CONNECT DIRECTLY TO THE MAIN LINE AND NOT "TEE" OFF FIRE HYDRANT LINE OR SERVICE LINES.
8. WATER METER CAN SHALL BE COMPLETELY BACKFILLED WITH COMPACTED 3" MINUS GRANULAR MATERIAL FROM TOP TO BOTTOM.
9. ANY NIPPLES USED FOR SERVICE SHALL BE STAINLESS STEEL.
10. METER FEE WILL BE ASSESSED WITH BUILDING PERMIT OR AT TIME OF METER INSTALLATION.
11. SEE APPENDIX A FOR ADDITIONAL APPROVED ALTERNATES.

HEBER CITY — HEART OF THE WASATCH BACK | DATE: 09/23 | SCALE: N.T.S. | 75 NORTH MAIN STREET HEBER CITY, UTAH 84032 (435) 654-0757
WATER SERVICE - SINGLE LOT
WATER-6B

UTILITY INSTALLATION TRENCH DETAIL (UTIL-1)

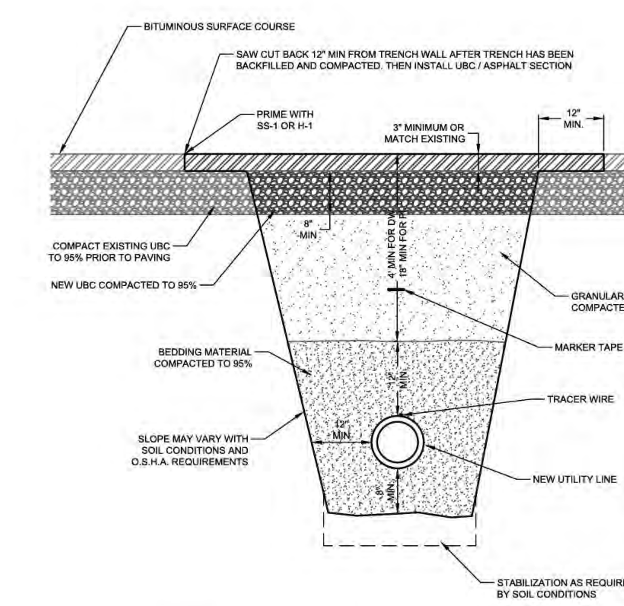

NOTES:
1. COMPACTED BEDDING MATERIAL SHALL NORMALLY CONSIST OF BEDDING SAND.
2. IF APPROVED BY CITY ENGINEER, 3/4" DRAIN ROCK MAY BE USED FOR BEDDING MATERIAL AND SHALL BE WRAPPED IN APPROVED FILTER FABRIC (SEE HEBER CITY SPECIFICATION 02772.2.02), UNLESS OTHERWISE APPROVED.
3. MATERIALS, METHOD & COMPACTION SHALL BE APPROVED BY ENGINEER.
4. USE OF PEA GRAVEL OR COURSE SAND FOR BEDDING MATERIAL IS PROHIBITED UNLESS OTHERWISE APPROVED BY THE CITY ENGINGEER.
5. USE OF NATIVE MATERIAL FOR BACKFILL IS PROHIBITED (EXCEPT AS APPROVED BY THE CITY ENGINEER WITH FULL TIME TESTING AND INSPECTION).
6. USE PROPER MARKER TAPE AS APPROVED BY CITY ENGINEER.
7. INSTALL TRACER WIRE AS PER WATER-5.
8. FLOWABLE FILL IS PROHIBITED AS BACKFILL MATERIAL UNLESS OTHERWISE APPROVED BY CITY ENGINEER. WHEN APPROVED, SURFACE FINISHES MUST STILL BE MATCHED.

HEBER CITY — HEART OF THE WASATCH BACK | DATE: 09/23 | SCALE: N.T.S. | 75 NORTH MAIN STREET HEBER CITY, UTAH 84032 (435) 654-0757
UTILITY INSTALLATION TRENCH DETAIL
UTIL-1

path: X:\Heber\Buie - Highway 40\Commericial Subdivision_2023\Final\ file name: C11_WTR-PI_DETAILS.dwg | plot date: May 07, 2024 | plotted by: STACEY-PC

HEBER CITY ENGINEER ACCEPTANCE

RUSSELL FUNK ____ DATE ____

JURA HOLDINGS
OLD MILL VILLAGE

WATER & PI CONSTRUCTION DETAILS

BERG ENGINEERING
380 E Main St. Suite 204
Midway, Ut 84049
ph 435.657.9749

DESIGN BY: PDB | DATE: 7 MAY 2024 | SHEET C11
DRAWN BY: SW | REV:

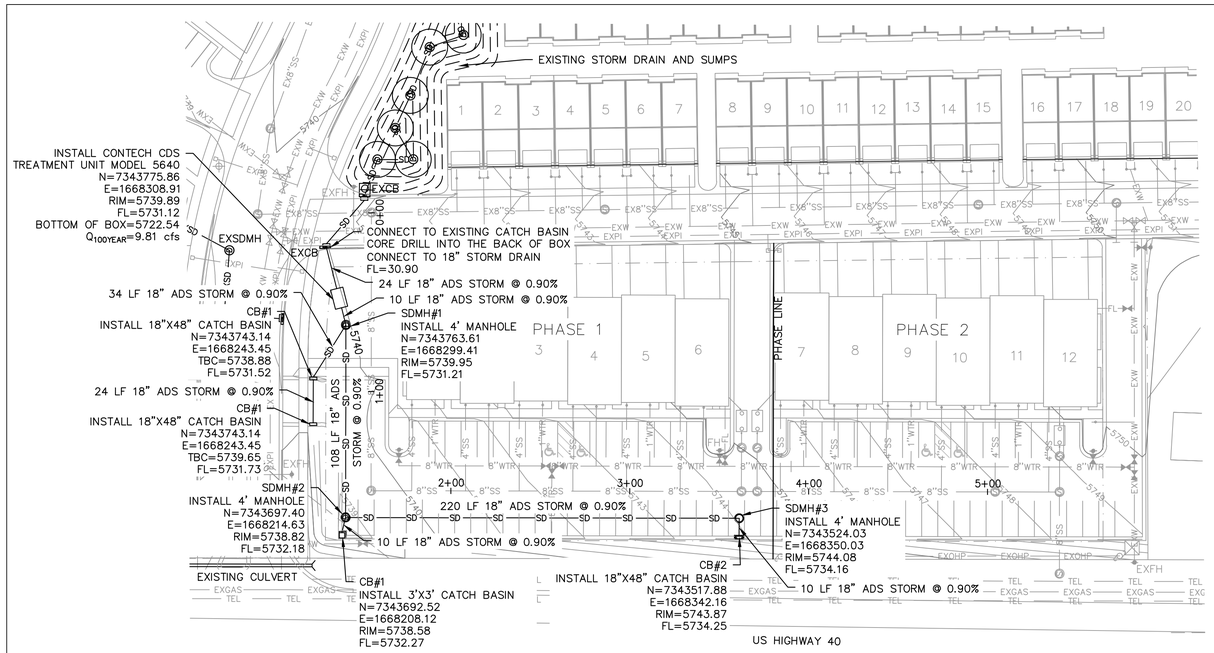

100 YEAR OVERFLOW NOTE

- PIPE CAN CARRY THE 100 YEAR STORM EVENT. NO OVERFLOW PATH NEEDED.
- A 3'X3' GRATE WITH 6" OF HEAD HAS A CAPACITY OF 14 cfs PER NYLOPLAST

STORM DRAIN RUNOFF CALCULATION NOTE

THE OLD MILL VILLAGE DEVELOPMENT, WHICH INCLUDED A TWO LOT COMMERCIAL SUBDIVISION, WAS PREVIOUSLY APPROVED BY HEBER CITY. THE CONSTRUCTION PLANS WERE STAMPED APPROVED ON AUGUST 24, 2021. STORM DRAIN RETENTION PONDS THAT HANDLE THE 100 YEAR RUNOFF FROM THE COMMERCIAL LOTS HAVE BEEN DESIGNED AND BUILT.
THE RUNOFF CALCULATIONS FOR THE ORIGINAL DESIGN ASSUMED A 0.80 RUNOFF COEFFICIENT FOR THE TWO COMMERCIAL LOTS. THE PROPOSED AMENDMENT TO THE COMMERCIAL LOTS RESULTS IN A RUNOFF COEFFICIENT OF 0.76. SINCE THE RUNOFF COEFFICIENT IS LOWER THAN THE COEFFICIENT USED IN THE ORIGINAL DESIGN THE CONSTRUCTED RETENTION POND WILL BE ABLE TO HOLD THE 100 YEAR STORM EVENT AND WILL HAVE SOME EXTRA CAPACITY. THE RUNOFF COEFFICIENT CALCULATIONS FOR THE AMENDED COMMERCIAL SUBDIVISION PLAN ARE SHOWN BELOW.

USE	AREA (ACRES)	RUNOFF COEFFICIENT
BUILDINGS	0.50	0.95
DRIVEWAYS	0.17	0.95
PARKING LOT	0.88	0.90
LANDSCAPING	0.43	0.20
	1.98	

$$\text{COMPOSITE RUNOFF COEFFICIENT} = \frac{(0.50x0.95)+(0.17x0.95)+(0.88x0.90)+(0.43x0.20)}{1.98}$$

= 0.76 FOR THE ENTIRE SITE

LEGEND

- EX8"SS — EXISTING 8" SEWER
- 4"SS — PROPOSED 4" SEWER LATERAL
- 6"SS — PROPOSED 6" SEWER
- EXW — EXISTING WATER
- 1"WTR — PROPOSED 1" WATER SERVICE
- FL — PROPOSED 4" WATER FIRE SERVICE
- 8"WTR — PROPOSED 8" WATER
- EXPI — EXISTING PRESSURIZED IRRIGATION
- EXSD — EXISTING STORM DRAIN
- SD — PROPOSED STORM DRAIN
- TEL — EXISTING COMMUNICATIONS LINE
- EXGAS — EXISTING GAS
- EXPWR — EXISTING OVERHEAD POWER
- FH — FIRE HYDRANT
- WM — WATER METER

BLUE STAKE NOTE:

- LOCATION OF EXISTING UTILITIES SHOWN ON PLAN ARE APPROXIMATE AND MAY BE INCOMPLETE. CONTRACTOR IS RESPONSIBLE FOR BLUE STAKING OF UTILITIES.

STORM DRAIN NOTE:

- ALL STORM DRAIN CONSTRUCTION TO MEET HEBER CITY STANDARDS.

100 YEAR STORM

$Q_{100year}$=CIA
=(0.76)(6.52)(1.98)

$Q_{100year}$=9.81 cfs

$Q_{18"PIPE}$=10.00 cfs @ 0.90% SLOPE

WATER QUALITY FLOWS

Q_{2year}=CIA
=(0.76)(1.94)(1.98)

Q_{2year}=2.91 cfs

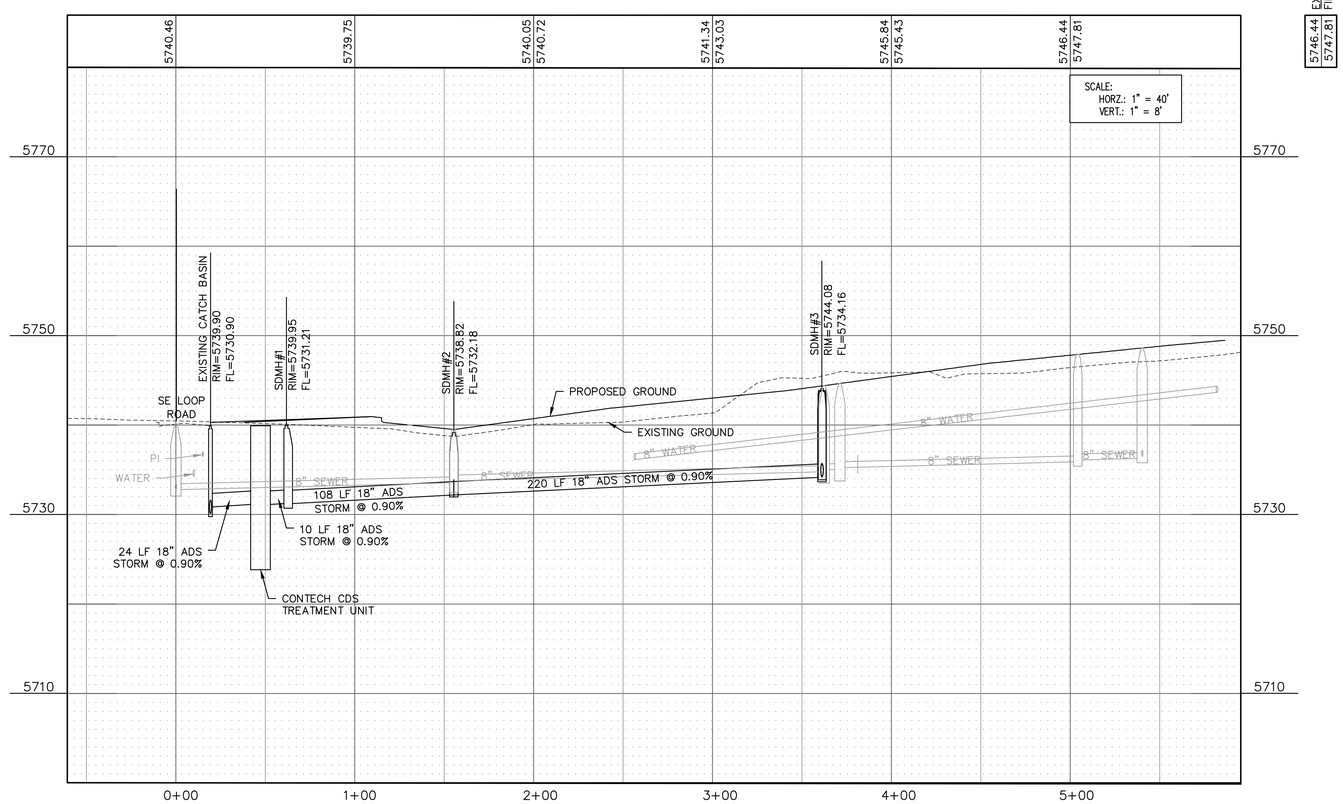

ENGINEER'S CERTIFICATION

I HEREBY CERTIFY THAT THIS REPORT/DESIGN FOR THE MANAGEMENT OF STORM WATER OF THIS DEVELOPMENT WAS PREPARED BY ME, OR UNDER MY DIRECT SUPERVISION IN ACCORDANCE WITH THE PROVISIONS OF HEBER CITY'S STORM WATER DESIGN MANUAL AND STANDARD SPECIFICATIONS AND DRAWINGS, AND WAS DESIGNED TO COMPLY WITH THE PROVISIONS THEREOF. I UNDERSTAND THAT THE CITY ASSUMES NO RESPONSIBILITY OR LIABILITY FOR THIS REPORT.

Paul D Berg
ENGINEER'S SIGNATURE

7 MAY 2024

NORTH

0 20 40 80 120

SCALE: 1"=40'
Scale 1" = 80' for 11x17

STATE OF UTAH
PAUL D. BERG
PROFESSIONAL ENGINEER

Paul D Berg
7 May 2024

HEBER CITY ENGINEER ACCEPTANCE

RUSSELL FUNK DATE

JURA HOLDINGS
OLD MILL VILLAGE

STORM DRAIN PLAN & PROFILE

BERG ENGINEERING
380 E Main St. Suite 204
Midway, Ut 84049
ph 435.657.9749

DESIGN BY: PDB	DATE: 7 MAY 2024	SHEET
DRAWN BY: SW	REV:	C12

path: X:\Heber\Bids - Highway 40\Commercial Subdivision 2023\Dwg\
file name: C12_STORM PROF.dwg | plot date: May 13, 2024 | plotted by: STACEY-PC

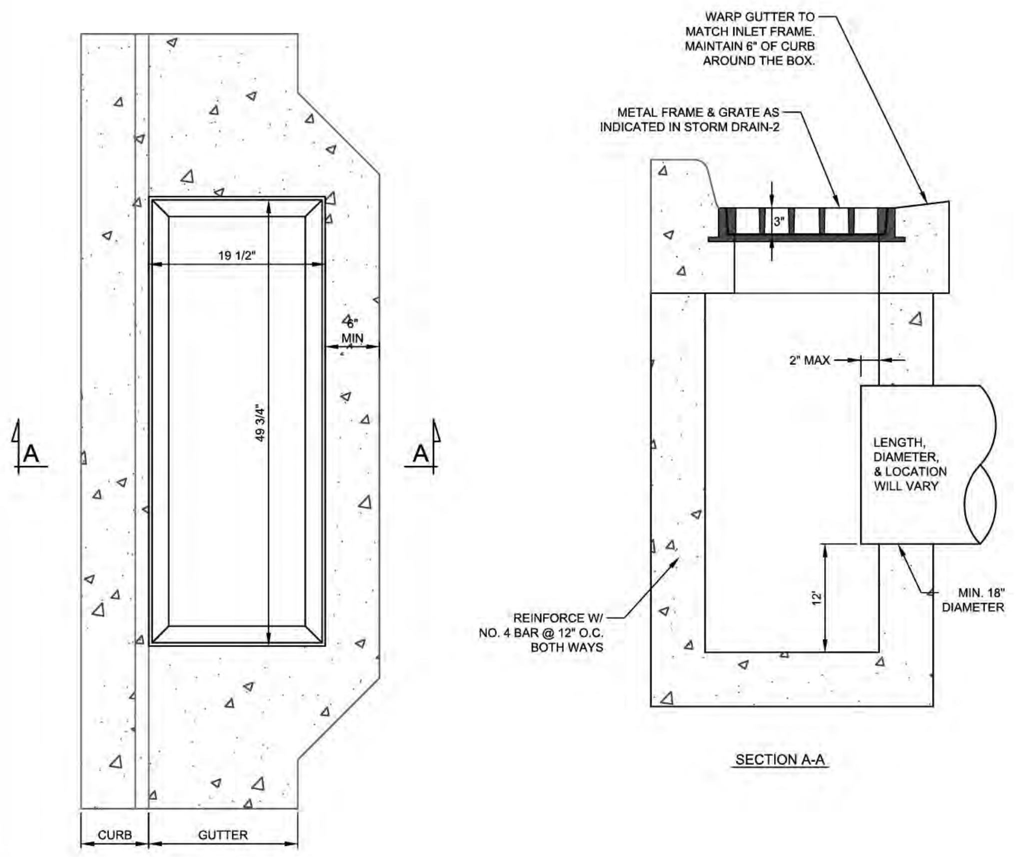

NOTES:

1. ALL FRAMES & GRATES TO BE CAST IRON.
2. CONSTRUCT BOX (WALL THICKNESS) TO MATCH EXISTING OR NEW TYPE OF CURB AS SHOWN.
3. A SNOUT OR APPROVED EQUAL SHALL BE USED WHERE THE STORM WATER IS LEAVING THE BOX OR STORM WATER SYSTEM AND ENTERING A SUMP, RETENTION / DETENTION POND, OR DISCHARGE POINT.

H:\Heber City\Std Dwgs\2023 September\Std Dwgs\STORM DRAIN-1.dwg - Inlet Box Std - 9/07/2023 03:41pm, natalier

HEBER CITY — HEART OF THE WASATCH BACK | DATE: 09/23 | SCALE: N.T.S. | 75 NORTH MAIN STREET, HEBER CITY, UTAH 84032, (435) 654-0757

CURB-DROP INLET STANDARD BOX

DRAIN-1

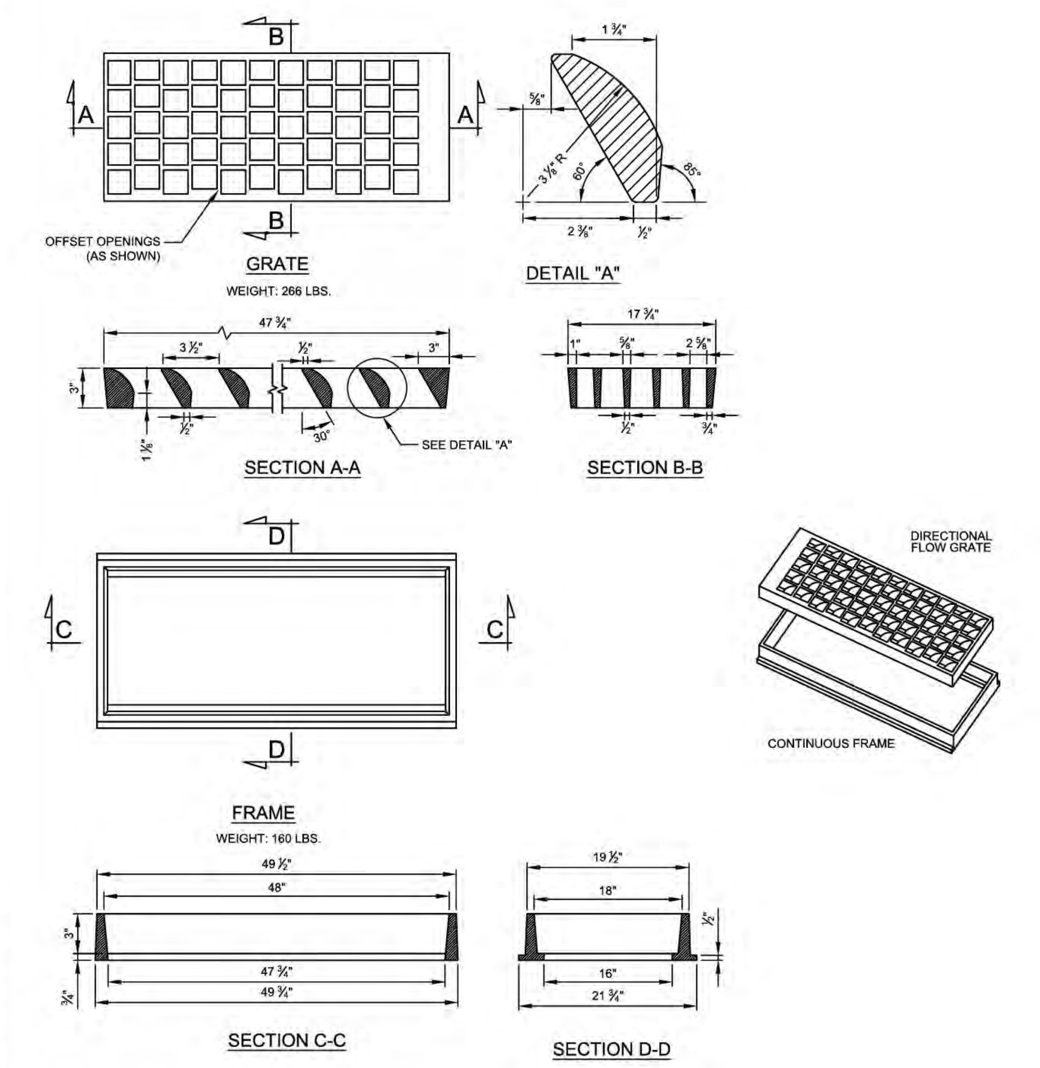

NOTES:

1. ALL DIMENSIONS ARE INCHES (in) UNLESS OTHERWISE NOTED.
2. GRATE AND FRAME MAY BE FURNISHED IN EITHER DUCTILE IRON (ASTM A-536 GRADE 60) OR CAST GRAY IRON: AASHTO M-105, CLASS 30 B (ASTM A-48).
3. INSTALLATION REQUIRES SUPPORT UNDER LONGITUDINAL AXIS OF FRAME. ORIENT GRATE WITH DIRECTION OF FLOW.
4. GRATE & FRAME SHALL BE D&L I-1803 OR APPROVED EQUAL.

DESIGN DATA:

MS 18 (HS-20) OR INTERSTATE ALTERNATE LOADING IN ACCORDANCE WITH CURRENT AASHTO AND INTERIM SPECIFICATIONS.

DUCTILE IRON AND STRUCTURAL STEEL: fs=138 MPa

H:\Heber City\Std Dwgs\2023 September\Std Dwgs\STORM DRAIN-2.dwg - Grate Frame - 9/07/2023 03:41pm, natalier

HEBER CITY | DATE: 03/17 | SCALE: N.T.S. | 75 NORTH MAIN STREET, HEBER CITY, UTAH 84032, (435) 654-0757

GRATE & FRAME

DRAIN-2

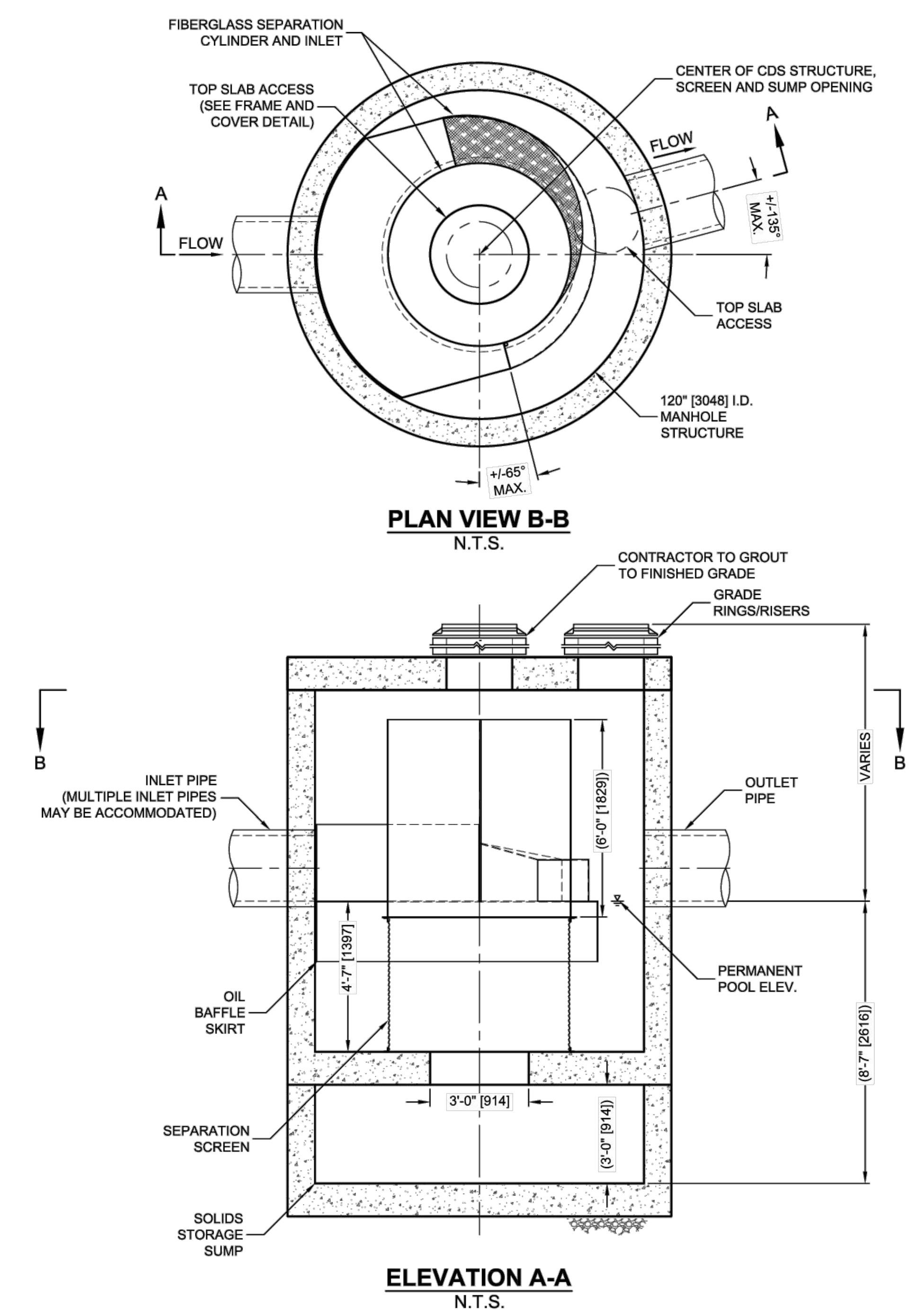

C:\USERS\SCHLACHTERH\DESKTOP\CDS DETAILS 180 MICRON SIZING\ACAD\CDS5640-10-C-DTL.DWG 5/19/2014 5:37 PM

CDS5640-10-C DESIGN NOTES

THE STANDARD CDS5640-10-C CONFIGURATION IS SHOWN. ALTERNATE CONFIGURATIONS ARE AVAILABLE AND ARE LISTED BELOW. SOME CONFIGURATIONS MAY BE COMBINED TO SUIT SITE REQUIREMENTS.

CONFIGURATION DESCRIPTION

- GRATED INLET ONLY (NO INLET PIPE)
- GRATED INLET WITH INLET PIPE OR PIPES
- CURB INLET ONLY (NO INLET PIPE)
- CURB INLET WITH INLET PIPE OR PIPES
- SEPARATE OIL BAFFLE (SINGLE INLET PIPE REQUIRED FOR THIS CONFIGURATION)
- SEDIMENT WEIR FOR NJDEP / NJCAT CONFORMING UNITS

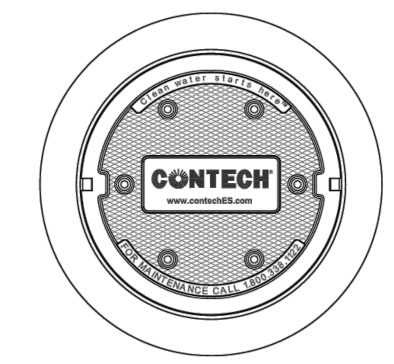

FRAME AND COVER
(DIAMETER VARIES)
N.T.S.

SITE SPECIFIC DATA REQUIREMENTS

STRUCTURE ID			
WATER QUALITY FLOW RATE (CFS OR L/s)			2.91 cfs
PEAK FLOW RATE (CFS OR L/s)			9.81 cfs
RETURN PERIOD OF PEAK FLOW (YRS)			100 year
SCREEN APERTURE (2400 OR 4700)			4700
PIPE DATA:	I.E.	MATERIAL	DIAMETER
INLET PIPE 1	*	*	*
INLET PIPE 2	*	*	*
OUTLET PIPE	*	*	*
RIM ELEVATION			*
ANTI-FLOTATION BALLAST		WIDTH	HEIGHT
		*	*
NOTES/SPECIAL REQUIREMENTS:			
* PER ENGINEER OF RECORD			

GENERAL NOTES

1. CONTECH TO PROVIDE ALL MATERIALS UNLESS NOTED OTHERWISE.
2. DIMENSIONS MARKED WITH ( ) ARE REFERENCE DIMENSIONS. ACTUAL DIMENSIONS MAY VARY.
3. FOR FABRICATION DRAWINGS WITH DETAILED STRUCTURE DIMENSIONS AND WEIGHTS, PLEASE CONTACT YOUR CONTECH ENGINEERED SOLUTIONS LLC REPRESENTATIVE. www.contechES.com
4. CDS WATER QUALITY STRUCTURE SHALL BE IN ACCORDANCE WITH ALL DESIGN DATA AND INFORMATION CONTAINED IN THIS DRAWING.
5. STRUCTURE SHALL MEET AASHTO HS20 AND CASTINGS SHALL MEET HS20 (AASHTO M 306) LOAD RATING, ASSUMING GROUNDWATER ELEVATION AT, OR BELOW, THE OUTLET PIPE INVERT ELEVATION. ENGINEER OF RECORD TO CONFIRM ACTUAL GROUNDWATER ELEVATION.
6. PVC HYDRAULIC SHEAR PLATE IS PLACED ON SHELF AT BOTTOM OF SCREEN CYLINDER. REMOVE AND REPLACE AS NECESSARY DURING MAINTENANCE CLEANING.

INSTALLATION NOTES

A. ANY SUB-BASE, BACKFILL DEPTH, AND/OR ANTI-FLOTATION PROVISIONS ARE SITE-SPECIFIC DESIGN CONSIDERATIONS AND SHALL BE SPECIFIED BY ENGINEER OF RECORD.
B. CONTRACTOR TO PROVIDE EQUIPMENT WITH SUFFICIENT LIFTING AND REACH CAPACITY TO LIFT AND SET THE CDS MANHOLE STRUCTURE (LIFTING CLUTCHES PROVIDED).
C. CONTRACTOR TO ADD JOINT SEALANT BETWEEN ALL STRUCTURE SECTIONS, AND ASSEMBLE STRUCTURE.
D. CONTRACTOR TO PROVIDE, INSTALL, AND GROUT PIPES. MATCH PIPE INVERTS WITH ELEVATIONS SHOWN.
E. CONTRACTOR TO TAKE APPROPRIATE MEASURES TO ASSURE UNIT IS WATER TIGHT, HOLDING WATER TO FLOWLINE INVERT MINIMUM. IT IS SUGGESTED THAT ALL JOINTS BELOW PIPE INVERTS ARE GROUTED.

CONTECH ENGINEERED SOLUTIONS LLC
www.contechES.com
9025 Centre Pointe Dr., Suite 400, West Chester, OH 45069
800-338-1122 513-645-7000 513-645-7993 FAX

CDS5640-10-C
INLINE CDS
STANDARD DETAIL

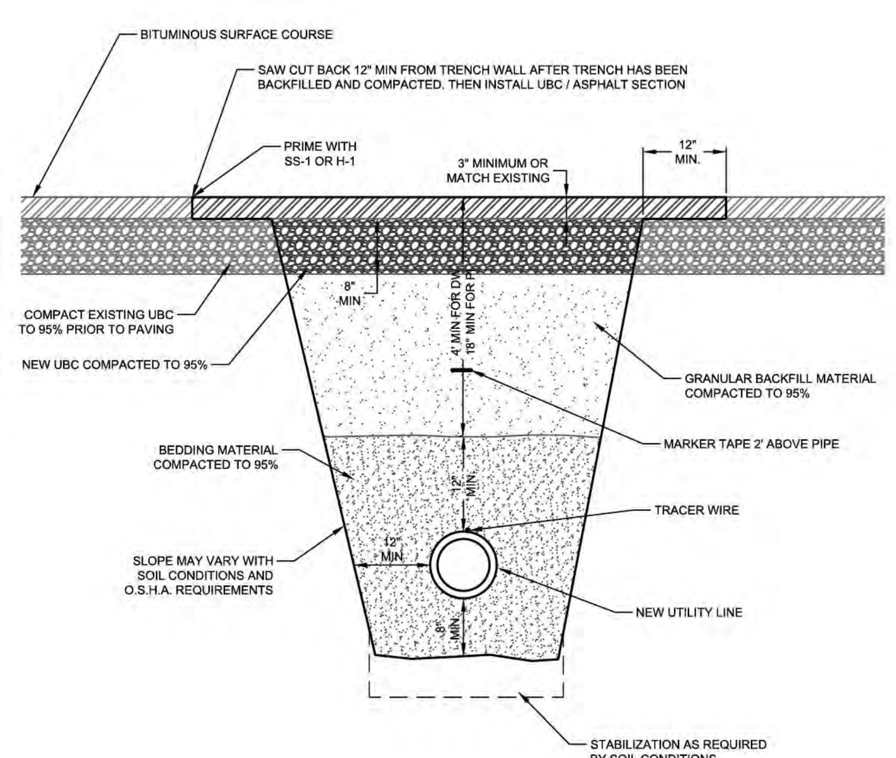

NOTES:

1. COMPACTED BEDDING MATERIAL SHALL NORMALLY CONSIST OF BEDDING SAND.
2. IF APPROVED BY CITY ENGINEER, 3/4" DRAIN ROCK MAY BE USED FOR BEDDING MATERIAL AND SHALL BE WRAPPED IN APPROVED FILTER FABRIC (SEE HEBER CITY SPECIFICATION 02772.2.02), UNLESS OTHERWISE APPROVED.
3. MATERIALS, METHOD & COMPACTION SHALL BE APPROVED BY ENGINEER.
4. USE OF PEA GRAVEL OR COURSE SAND FOR BEDDING MATERIAL IS PROHIBITED UNLESS OTHERWISE APPROVED BY THE CITY ENGINGEER.
5. USE OF NATIVE MATERIAL FOR BACKFILL IS PROHIBITED (EXCEPT AS APPROVED BY THE CITY ENGINEER WITH FULL TIME TESTING AND INSPECTION).
6. USE PROPER MARKER TAPE AS APPROVED BY CITY ENGINEER.
7. INSTALL TRACER WIRE AS PER WATER-5.
8. FLOWABLE FILL IS PROHIBITED AS BACKFILL MATERIAL UNLESS OTHERWISE APPROVED BY CITY ENGINEER. WHEN APPROVED, SURFACE FINISHES MUST STILL BE MATCHED.

H:\Heber City\Std Dwgs\2023 September\Std Dwgs\UTILITIES-1 Updated.dwg - Trench - 9/07/2023 03:43pm, natalier

HEBER CITY | DATE: 09/23 | SCALE: N.T.S. | 75 NORTH MAIN STREET, HEBER CITY, UTAH 84032, (435) 654-0757

UTILITY INSTALLATION TRENCH DETAIL

UTIL-1

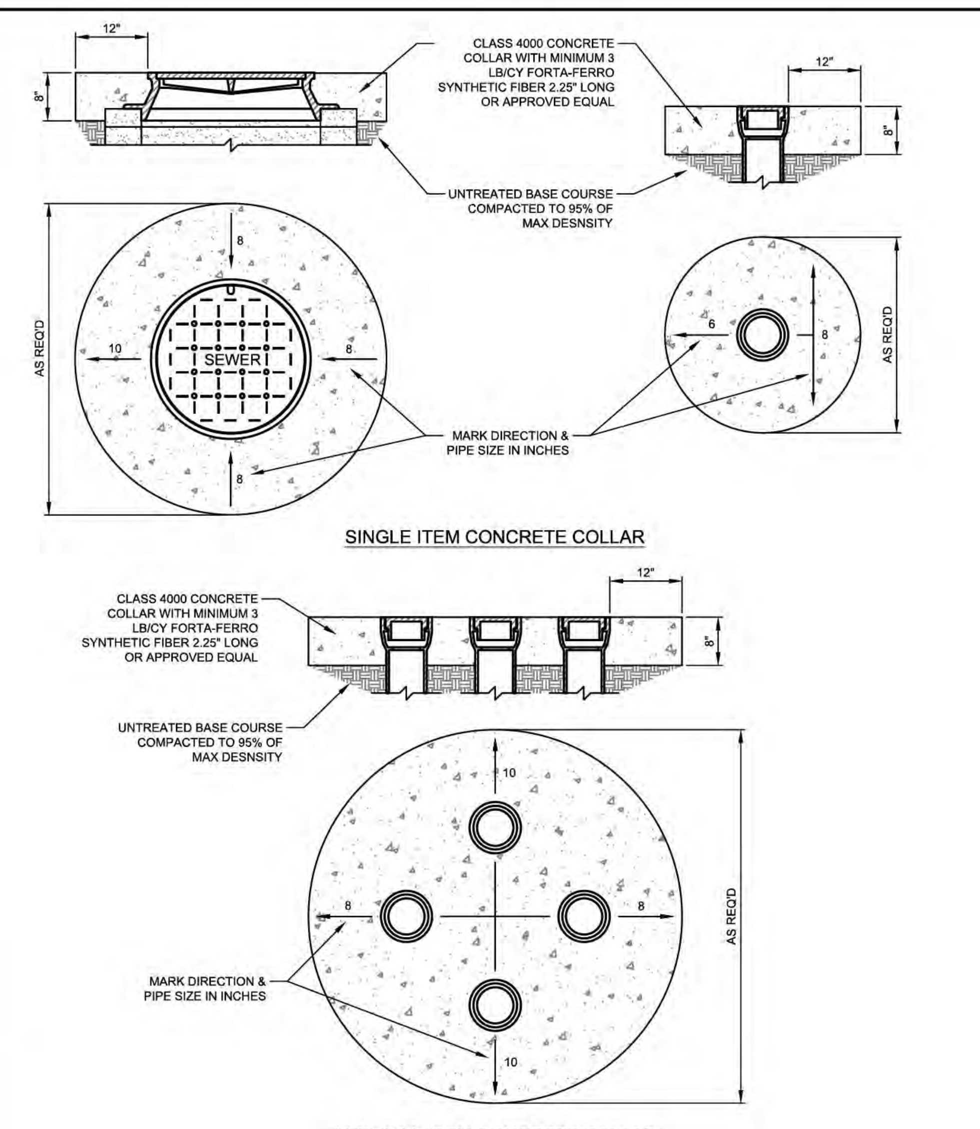

NOTES:

1. NEW AND EXISTING VALVE BOXES AND OTHER SIMILAR ITEMS SHALL BE ADJUSTED TO GRADE AFTER PAVING IS COMPLETE.
2. THE SURFACE OF THE ADJUSTED RING SHALL MATCH THE GRADE OF THE CONCRETE COLLAR. THE CONCRETE COLLAR SHALL BE 1/4" to 3/8" BELOW THE ADJACENT PAVED SURFACE.
3. ASPHALT SHALL BE CUT IN STRAIGHT VERTICAL LINES AT COLLAR EDGES.
4. MARK CONCRETE COLLAR WITH DIRECTION ARROW AND PIPE SIZE IN INCHES.
5. SIZES AND CONFIGURATIONS FOR EXAMPLE ONLY. SHOW ACTUAL CONFIGURATION FOR EACH SITUATION.
6. WHERE WHIRLYGIG SYSTEMS (OR EQUAL) ARE USED TO BRING MANHOLE COLLARS TO GRADE IN PLACE OF CONCRETE GRADE RINGS, THE CONCRETE COLLAR SHALL EXTEND ALL THE WAY TO THE CONE OR HIGHEST MANHOLE SECTION.

H:\Heber City\Std Dwgs\2023 September\Std Dwgs\UTILITIES-4.dwg - Conc Collar - 9/07/2023 03:43pm, natalier

HEBER CITY | DATE: 03/17 | SCALE: N.T.S. | 75 NORTH MAIN STREET, HEBER CITY, UTAH 84032, (435) 654-0757

UTILITY CONCRETE COLLAR

UTILITIES-4

3'x3' Basin — *3'x3' Catch Basin Bases, Risers and Lid* — Oldcastle Precast

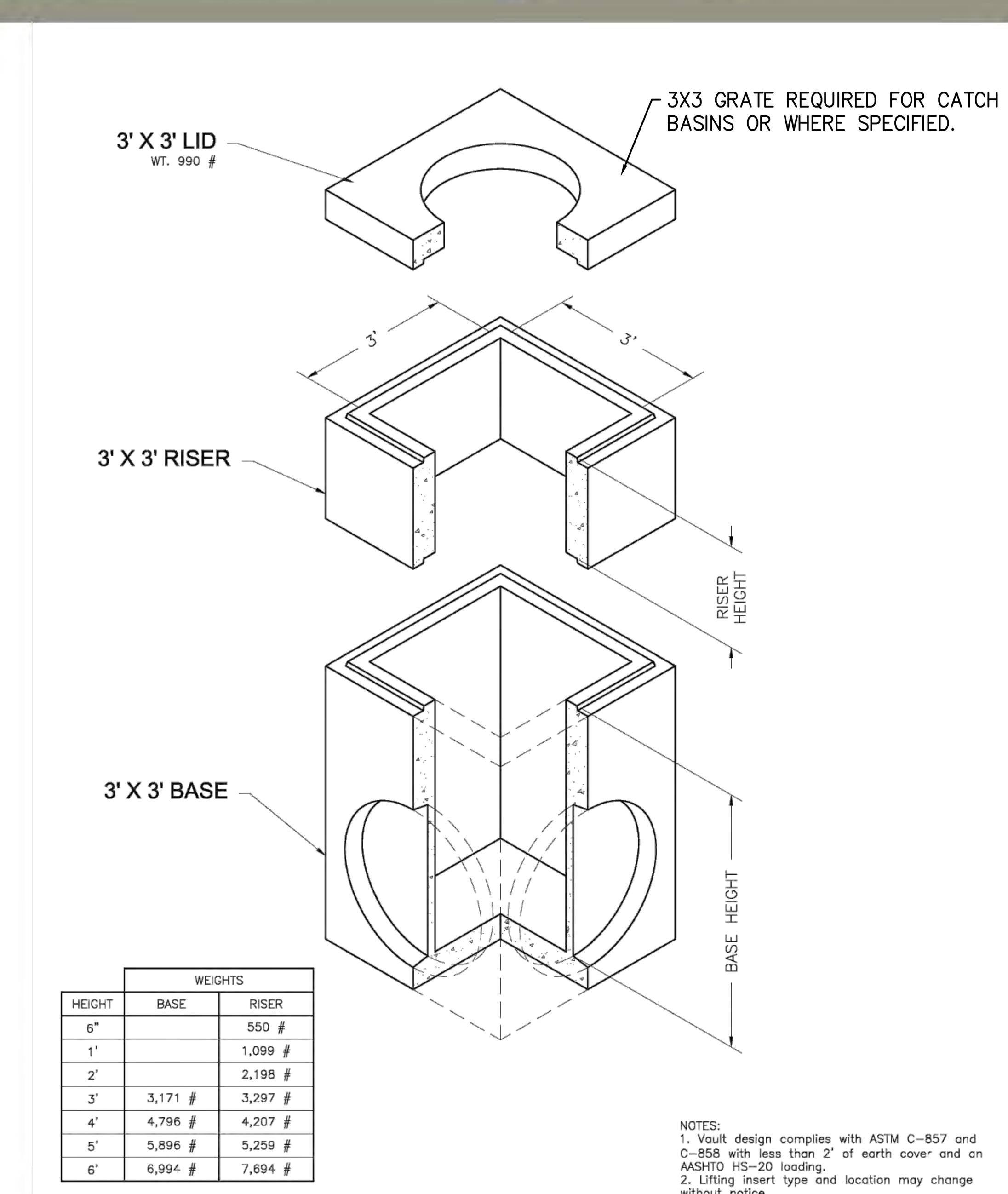

	WEIGHTS	
HEIGHT	BASE	RISER
6"		550 #
1'		1,099 #
2'		2,198 #
3'	3,171 #	3,297 #
4'	4,796 #	4,207 #
5'	5,896 #	5,259 #
6'	6,994 #	7,694 #

NOTES:
1. Vault design complies with ASTM C-857 and C-858 with less than 2' of earth cover and an AASHTO HS-20 loading.
2. Lifting insert type and location may change without notice.

HEBER CITY ENGINEER ACCEPTANCE

RUSSELL FUNK — DATE

JURA HOLDINGS
OLD MILL VILLAGE

STORM CONSTRUCTION DETAILS

BERG ENGINEERING
380 E Main St. Suite 204
Midway, Ut 84049
ph 435.657.9749

DESIGN BY: PDB | DATE: 7 MAY 2024 | SHEET C13
DRAWN BY: SW | REV:

path: X:\Heber\Buie - Highway 40\Commericial Subdivision_2023\Final\ | plotted by: STACEY-PC
file name: C13_STORM_DETAILS.dwg | plot date: May 08, 2024

LEGEND

- STABILIZED CONSTRUCTION ENTRANCE
- SILT FENCE
- INLET PROTECTION
- EX8"SS — EXISTING 8" SEWER
- 4"SS — PROPOSED 4" SEWER LATERAL
- 6"SS — PROPOSED 6" SEWER
- 8"SS — PROPOSED 8" SEWER
- EXW — EXISTING WATER
- 1"WTR — PROPOSED 1" WATER SERVICE
- FL — PROPOSED 4" WATER FIRE SERVICE
- 8"WTR — PROPOSED 8" WATER
- EXPI — EXISTING PRESSURIZED IRRIGATION
- PI — PROPOSED PRESSURIZED IRRIGATION
- EXSD — EXISTING STORM DRAIN
- SD — PROPOSED STORM DRAIN
- TEL — EXISTING COMMUNICATIONS LINE
- EXGAS — EXISTING GAS
- EXOHP — EXISTING OVERHEAD POWER
- FH — FIRE HYDRANT
- WM — WATER METER

BLUE STAKE NOTE:

- LOCATION OF EXISTING UTILITIES SHOWN ON PLAN ARE APPROXIMATE AND MAY BE INCOMPLETE. CONTRACTOR IS RESPONSIBLE FOR BLUE STAKING OF UTILITIES.

STORM DRAIN NOTE:

- ALL STORM DRAIN CONSTRUCTION TO MEET HEBER CITY STANDARDS.

EROSION CONTROL FOR STORM DRAIN SYSTEM AND SUMPS
CONSTRACTOR SHALL INSTALL EROSION CONTROL AT ALL CATCH BASINS AND SUMPS DURING CONSTRUCTION. EROSION CONTROL TO INCLUDE FILTER FABRIC AND HAY BALES. CONTRACTOR SHALL PERIODICALLY REMOVE SEDIMENT THAT COLLECTS AROUND THE CATCH BASINS AND SHALL KEEP THE STORM DRAIN SYSTEM FREE OF SEDIMENT AND DEBRIS.

CONSTRUCTION ENTRANCE
A STABILIZED CONSTRUCTION ACCESS IS REQUIRED FOR THIS PROJECT DURING CONSTRUCTION OF THE DEVELOPMENT AND BUILDINGS. THE CONTRACTOR IS RESPONSIBLE FOR INSTALLING A STABILIZED CONSTRUCTION ACCESS.

CLEARING AND GRUBBING
CONTRACTOR IS RESPONSIBLE TO CLEAR AND GRUB A MINIMUM OF 12" FROM THE ROADWAY AREA FOR THE STREET. TOPSOIL ON THIS PROJECT MAY REQUIRE MORE THAN 12".

A UPDES GENERAL CONSTRUCTION PERMIT IS REQUIRED. THE CONTRACTOR SHALL APPLY FOR THE PERMIT AND SHALL PROVIDE A COPY OF THE APPROVED PERMIT TO HEBER CITY PRIOR TO CONSTRUCTION.

EROSION CONTROL SHALL BE INSTALLED AT ALL CATCH BASINS AND SUMPS.

FILTER FABRIC TO BE INSTALLED IN ALL SUMP MANHOLES LIDS UNTIL VEGETATION IS ESTABLISHED IN THE STORM DRAIN PONDS.

A STABLIZED CONSTRUCTION ACCESS SHALL BE INSTALLED AT ALL ACCESS POINTS TO THE PROJECT.

NARRATIVE: THIS PLAN MAY BE USED FOR THE CONSTRUCTION OF A STORM WATER BEST MANAGEMENT PRACTICE (BMP). IT IS NOT INCLUSIVE OF ALL PRACTICES AVAILABLE AND IS ONLY SPECIFIC TO THE CONSTRUCTION OF THIS TYPE. MAINTENANCE OF THIS TYPE OF INSTALLATION IS IMPORTANT AND SHOULD BE CONTINUOUSLY MONITORED BY THE CONTRACTOR AND ENGINEER. DETAILS SHOWN HERE HIGHLIGHT IMPORTANT PARTS OF CONSTRUCTION, AND SHOULD BE MODIFIED AS NEEDED.

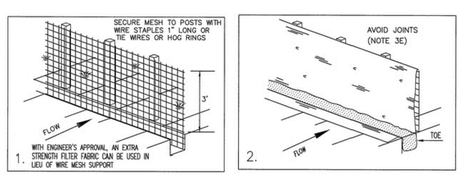

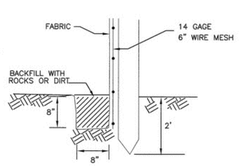

TOE DETAIL

Silt fence

NARRATIVE: THIS PLAN MAY BE USED FOR THE CONSTRUCTION OF A STORM WATER BEST MANAGEMENT PRACTICE (BMP). IT IS NOT INCLUSIVE OF ALL PRACTICES AVAILABLE AND IS ONLY SPECIFIC TO THE CONSTRUCTION OF THIS TYPE. MAINTENANCE OF THIS TYPE OF INSTALLATION IS IMPORTANT AND SHOULD BE CONTINUOUSLY MONITORED BY THE CONTRACTOR AND ENGINEER. DETAILS SHOWN HERE HIGHLIGHT IMPORTANT PARTS OF CONSTRUCTION, AND SHOULD BE MODIFIED AS NEEDED.

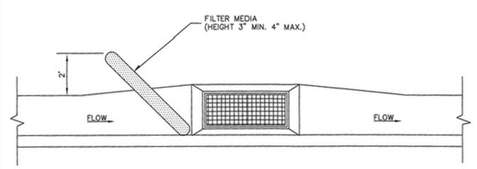

ON-GRADE INLET PROTECTION DETAIL

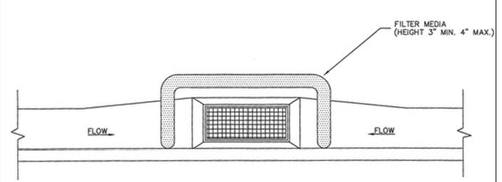

DROP INLET PROTECTION DETAIL

Inlet protection - gravel sock

NARRATIVE: THIS PLAN MAY BE USED FOR THE CONSTRUCTION OF A STORM WATER BEST MANAGEMENT PRACTICE (BMP). IT IS NOT INCLUSIVE OF ALL PRACTICES AVAILABLE AND IS ONLY SPECIFIC TO THE CONSTRUCTION OF THIS TYPE. MAINTENANCE OF THIS TYPE OF INSTALLATION IS IMPORTANT AND SHOULD BE CONTINUOUSLY MONITORED BY THE CONTRACTOR AND ENGINEER. DETAILS SHOWN HERE HIGHLIGHT IMPORTANT PARTS OF CONSTRUCTION, AND SHOULD BE MODIFIED AS NEEDED.

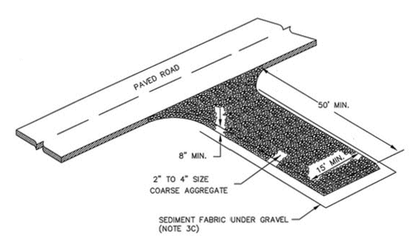

Stabilized roadway entrance

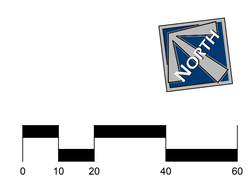

STATE OF UTAH
PAUL D. BERG
PROFESSIONAL ENGINEER
Paul D Berg
7 May 2024

HEBER CITY ENGINEER ACCEPTANCE

RUSSELL FUNK — DATE

JURA HOLDINGS
OLD MILL VILLAGE

STORM WATER POLLUTION PREVENTION PLAN

BERG ENGINEERING
380 E Main St. Suite 204
Midway, Ut 84049
ph 435.657.9749

DESIGN BY: PDB	DATE: 7 MAY 2024	SHEET
DRAWN BY: SW	REV:	C14

path: X:\Heber\Bula - Highway 40\Commercial Subdivision_20231\Dwg\
file name: C14_SWPPP.dwg | plot date: May 13, 2024 | plotted by: STACEY-PC

WALL SCHEDULE		
Mark	Description	Comments
W1	2X6 STUDS @ 16" O.C. WITH EIFS OVER STRUCTURAL SHEATHING EXTERIOR - 5/8" TYPE "X" GYPSUM WALLBOARD INTERIOR	
W3	2X6 STUDS @ 16" O.C. WITH 5/8" TYPE "X" GYPSUM WALLBOARD EACH SIDE	
W4	2X4 STUDS @ 16" O.C. WITH (2) LAYERS 5/8" TYPE "X" GYPSUM WALLBOARD EACH SIDE	
W9	2X6 STUDS @ 16" O.C. WITH EIFS & BRICK OVER STRUCTURAL SHEATHING EXTERIOR - 5/8" TYPE "X" GYPSUM WALLBOARD INTERIOR	

KEYNOTE LEGEND	
Key Value	Keynote Text

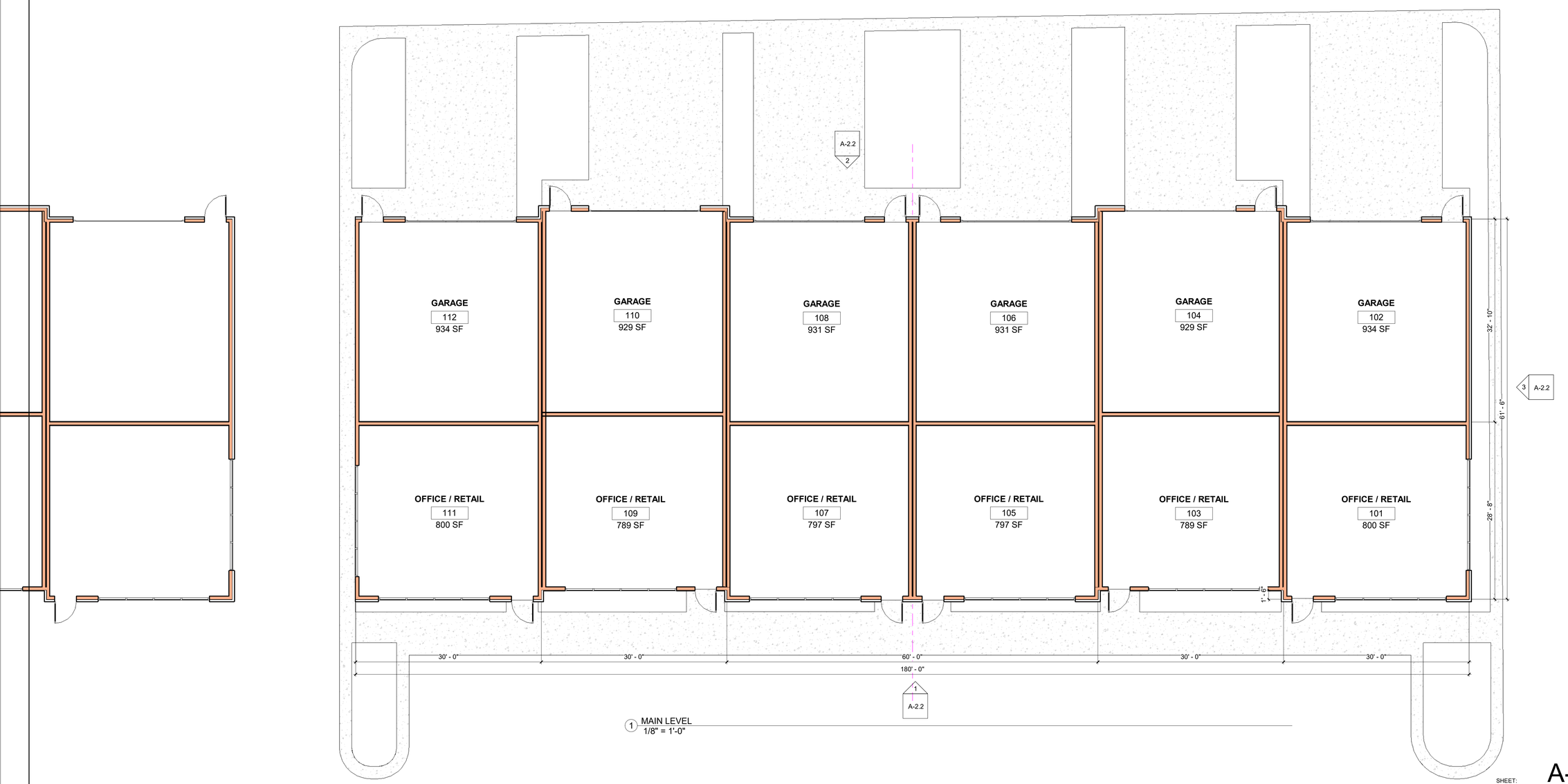

1 MAIN LEVEL
1/8" = 1'-0"

REVISIONS

NO.	DESCRIPTION	DATE

MAIN FLOOR PLAN

DRAWN:	r lee
JOB NUMBER:	2101
SET:	APPROVAL
DATE:	03.08.24

OLD MILL VILLAGE

HEBER CITY UT

SEAL

LEE DESIGN GROUP
ARCHITECTURAL DESIGN STUDIO
444 SOUTH MAIN STREET # C-2
CEDAR CITY UT 84720
435/359.9110
www.ldgutah.com

SHEET: A-1.1

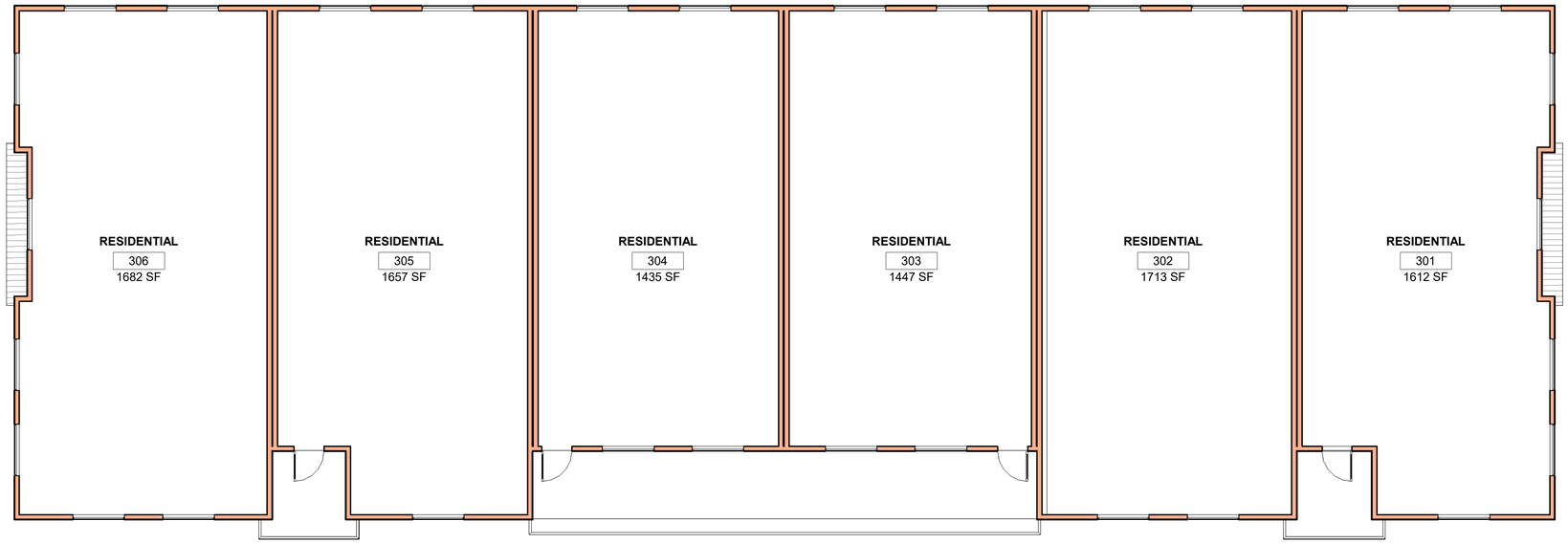

2 LEVEL 3
1/8" = 1'-0"

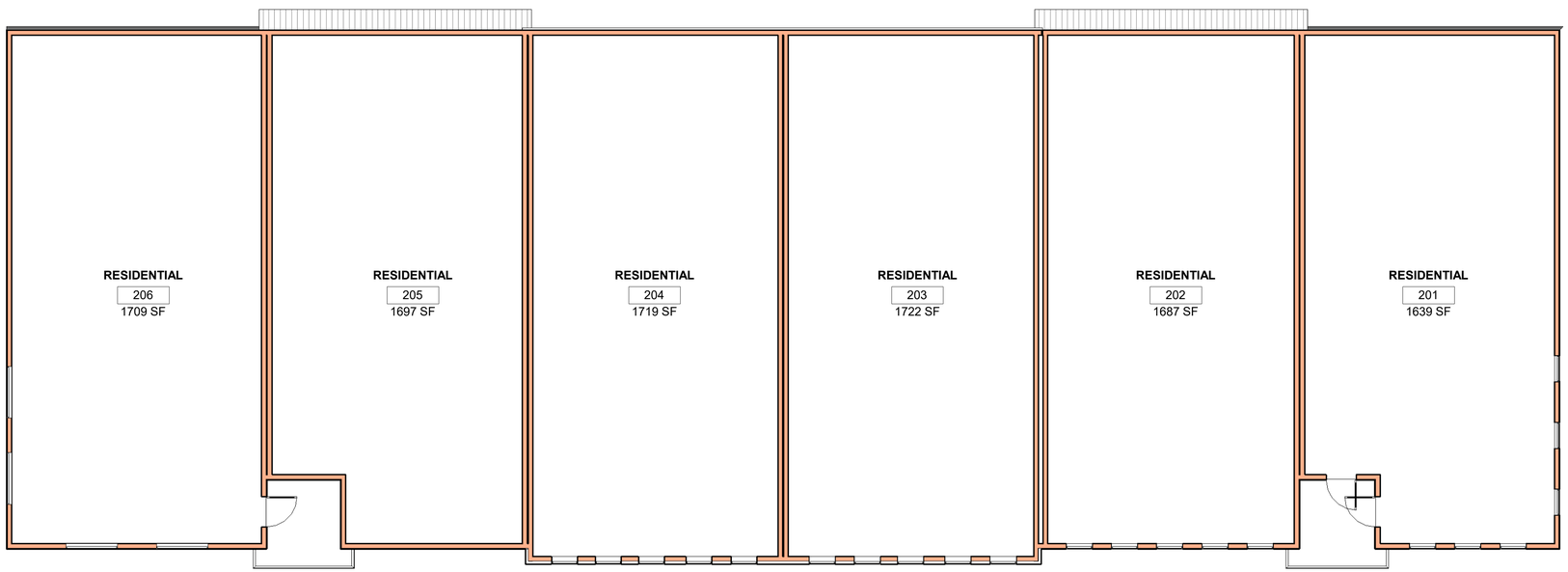

1 LEVEL 2
1/8" = 1'-0"

REVISIONS

NO.	DESCRIPTION	DATE

UPPER FLOOR PLANS

DRAWN:	Author
JOB NUMBER:	2101
SET:	APPROVAL
DATE:	03.08.24

OLD MILL VILLAGE

HEBER CITY UT

SEAL

LEE DESIGN GROUP
ARCHITECTURAL DESIGN STUDIO

444 SOUTH MAIN STREET # C-2
CEDAR CITY UT 84720
435/359 9110
www.ldgutah.com

SHEET: A-1.2

3 SIDE ELEVATION
1/8" = 1'-0"

KEYNOTE LEGEND	
Key Value	Keynote Text

ROOF MATERIAL SCHEDULE	
MATERIAL MARK	MATERIAL DESCRIPTION
RF-3	SINGLE-PLY TPO MEMBRANE ROOFING

WALL MATERIAL SCHEDULE	
MATERIAL MARK	MATERIAL DESCRIPTION
<varies>	COMMON BRICK - RUNNING BOND, PAINTED
<varies>	

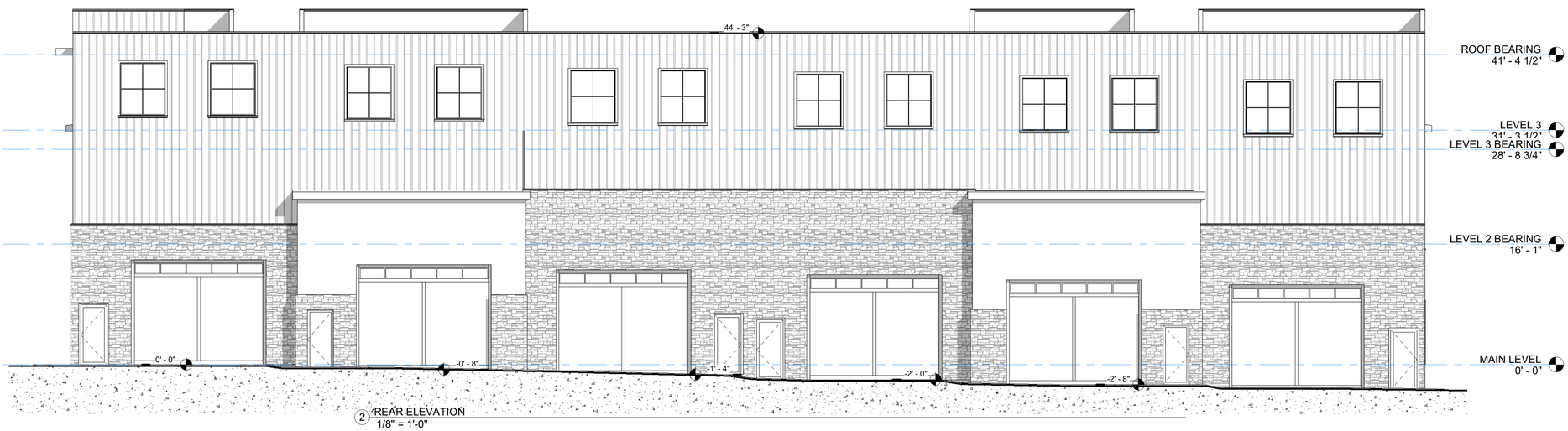

2 REAR ELEVATION
1/8" = 1'-0"

1 FRONT (NORTH) ELEVATION
1/8" = 1'-0"

REVISIONS

NO.	DESCRIPTION	DATE

EXTERIOR ELEVATIONS

DRAWN:	R Lee
JOB NUMBER:	2101
SET:	APPROVAL
DATE:	03.08.24

OLD MILL VILLAGE

HEBER CITY UT

SEAL

LEE DESIGN GROUP
ARCHITECTURAL DESIGN STUDIO
444 SOUTH MAIN STREET # C-2
CEDAR CITY UT 84720
435/359 9110
www.ldgutah.com

SHEET: A-2.1

MATERIAL SCHEDULE		
MARK	DESCRIPTION	QUANTITY / PERCENTAGE
	E.I.F.S. PLASTER SYSTEM	150 sq.ft. 6%
	CEMENTITOUS BOARD & BATT SIDING	1,122 sq.ft. 51%
	STONE CLADDING	944 sq.ft. 43%

3 EAST & WEST MATERIAL SCHEDULE
1/8" = 1'-0"

MATERIAL SCHEDULE		
MARK	DESCRIPTION	QUANTITY / PERCENTAGE
	E.I.F.S. PLASTER SYSTEM	693 sq.ft. 12%
	CEMENTITOUS BOARD & BATT SIDING	3,433 sq.ft. 58%
	STONE CLADDING	1,758 sq.ft. 30%

2 SOUTH MATERIAL SCHEDULE
1/8" = 1'-0"

MATERIAL SCHEDULE		
MARK	DESCRIPTION	QUANTITY / PERCENTAGE
	E.I.F.S. PLASTER SYSTEM	893 sq.ft. 16%
	CEMENTITOUS BOARD & BATT SIDING	2,833 sq.ft. 51%
	STONE CLADDING	1,814 sq.ft. 33%

1 NORTH MATERIAL SCHEDULE
1/8" = 1'-0"

REVISIONS

NO.	DESCRIPTION	DATE

EXTERIOR WALL FINISH STUDIES

DRAWN:	Author
JOB NUMBER:	2101
SET:	APPROVAL
DATE:	03.08.24

OLD MILL VILLAGE

HEBER CITY UT

SEAL

LEE DESIGN GROUP
ARCHITECTURAL DESIGN STUDIO
444 SOUTH MAIN STREET # C-2
CEDAR CITY UT 84720
435/359 9110
www.ldgutah.com

SHEET: A-2.2

REVISIONS

NO.	DESCRIPTION	DATE

ILLUSTRATIONS

DRAWN:	R Lee
JOB NUMBER:	2101
SET:	APPROVAL
DATE:	03.08.24

OLD MILL VILLAGE

HEBER CITY UT

SEAL

LEE DESIGN GROUP
ARCHITECTURAL DESIGN STUDIO

444 SOUTH MAIN STREET # C-2
CEDAR CITY UT 84720
435/359 9110
www.ldgutah.com

SHEET: A-2.3

STONE

BEEHIVE STONE "CASHMERE" LIMESTONE

WOOD VERTICAL SIDING

STAINED CEDAR

METAL COPING & TRIM

NATURAL BLACK METAL

EIFS

DRYVIT "SUPERWHITE"

STOREFRONT GLASS

BLACK ALUMINUM

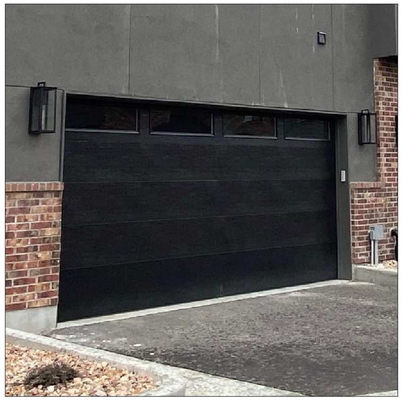

GARAGE DOORS

CUSTOM WOOD OVERHEAD DOOR

WINDOWS

BLACK ALUMINUM CLAD WOOD

	Primary	Secondary	Tertiary
Var 1	Dorian Grey, 172-170-158	Software, 127-132-135	Cityscape, 127-129-126
Var 2	Pavestone, 160-153-143	Colonnade Gray, 199-192-182	March Wind, 186-185-181
Var 3	Repose Gray, 204-201-192	City Scape, 127-129-126	Retreat, 122-128-118
Var 4	Mindrul, 187-183-172	Dovetail, 145-138-130	Colonnade Gray, 199-192-182

OVERALL COLOR PALETTE

REVISIONS

NO.	DESCRIPTION	DATE

MATERIAL LEGEND

DRAWN:	R Lee
JOB NUMBER:	2101
SET:	APPROVAL
DATE:	03.08.24

OLD MILL VILLAGE

HEBER CITY UT

SEAL

LEE DESIGN GROUP
ARCHITECTURAL DESIGN STUDIO
444 SOUTH MAIN STREET # C-2
CEDAR CITY UT 84720
435/359.9110
www.ldgutah.com

SHEET: A-2.4

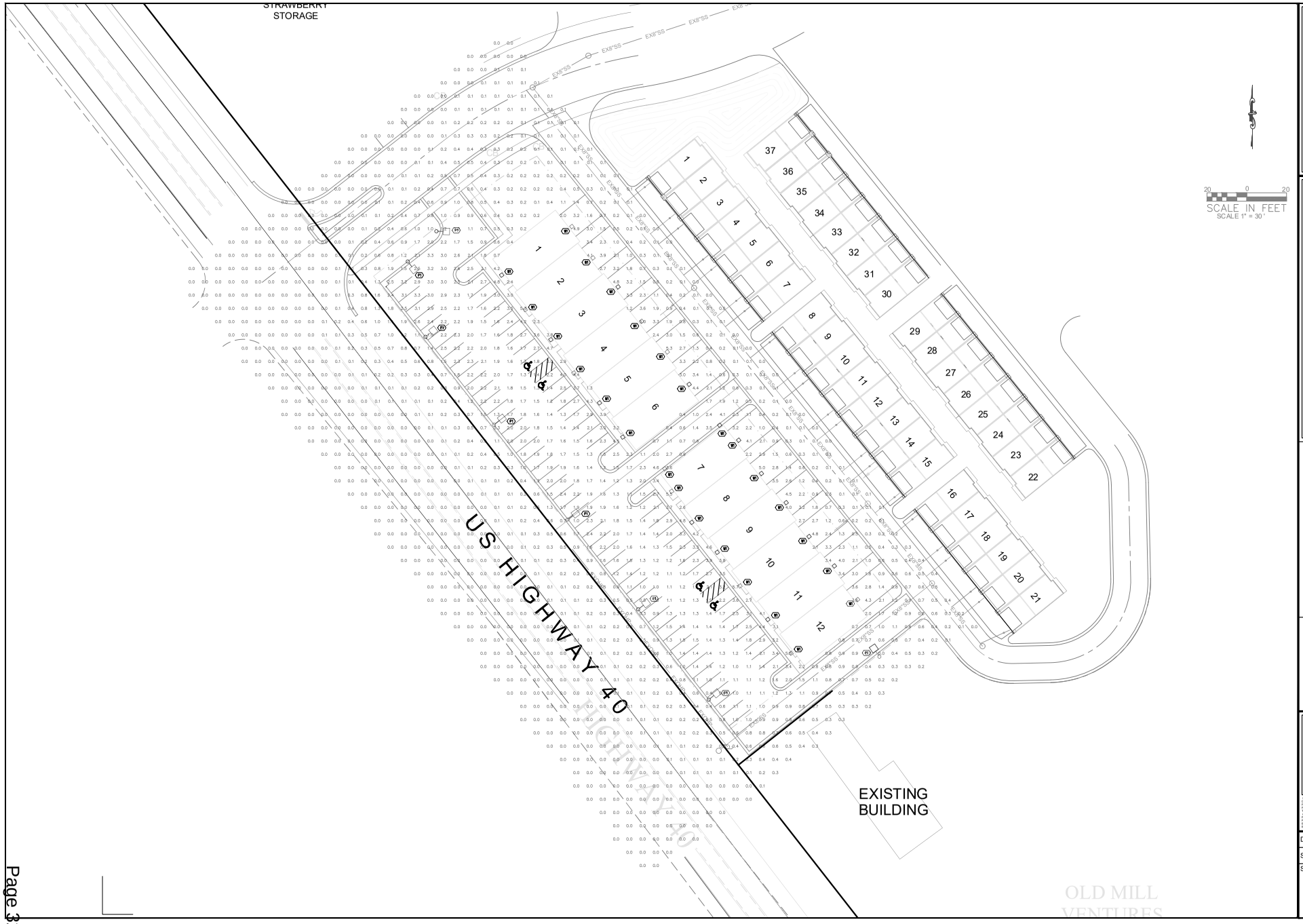

IRON ROCK GROUP

Building on Solid Foundations

460 E. 300 SOUTH
KANAB, UTAH 84741
435-644-2031
www.ironrockeng.com

HEBER PROJECT

SITE PHOTOMETRIC PLAN

HEBER CITY, UTAH

INITIAL SUBMITTAL:	8/1/2023
REV#:	DATE:	DESCRIPTION:

ALL PLANS, CONSTRUCTION DOCUMENTS, RENDERINGS, MODELS, DESIGN CONCEPTS, AND SO FORTH CONSTITUTE INTELLECTUAL PROPERTY OF IRON ROCK ENGINEERING AND ARE THE PROPERTY OF THE AUTHORS AND ARE COPYRIGHT PROTECTED UNDER SECTION 102 OF THE COPYRIGHT ACT (TITLE 17 OF THE UNITED STATES CODE). AS SUCH, NO PART OF THE PLANS MAY BE REPRODUCED, DISTRIBUTED, PUBLISHED, OR REUSED IN ANY WAY, IN WHOLE OR IN PART, WITHOUT PRIOR WRITTEN AGREEMENT FROM IRON ROCK ENGINEERING. ANY USE IN VIOLATION OF COPYRIGHT AND/OR EXPRESSLY PROHIBITED.

DRAWN BY: GA

SCALE: 1" = 30'

SHEET: E5.0

LUMINAIRE SCHEDULE

*ALL LIGHTING TO BE FULL CUT OFF

CALLOUT	SYMBOL	WATTAGE	DESCRIPTION	MOUNTING	MODEL	LAMP COLOR	MOUNTING HEIGHT
P1	○—□	130W	Arlington LED Post–Top Full Cutoff Lantern 130W 3000 series CCT Type 4 distribution zero uplight No glass House side shield	POLE	Holophane, AUCL3 P100 30K xxxx FC4 HSS	3000K	20'
W1	□	24W	WPX1 LED wallpack 3000lm 3000K color temperature 120–277 Volts	WALL	Lithonia Lighting, WPX1 LED P2 30K Mvolt	3000K	12'

POLE LIGHTS (P1)

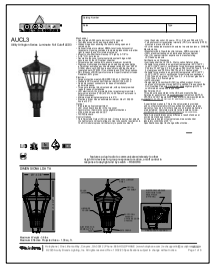

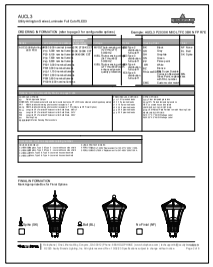

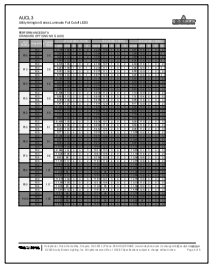

WALL MOUNTED LIGHTS LIGHTS (W1)

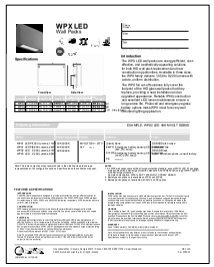

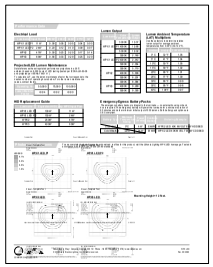

POLE (CONTRACTOR TO MATCH THIS POLE STYLE)

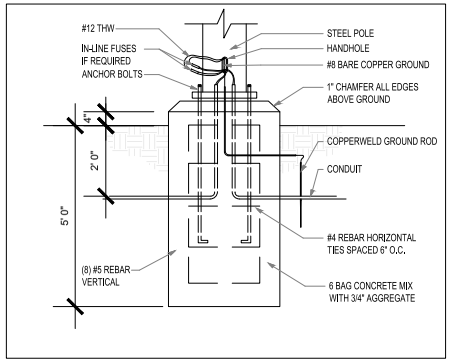

PB 1 **POLE BASE DETAIL**
NO SCALE

IRON ROCK GROUP
Building on Solid Foundations
460 E. 300 SOUTH
KANAB, UTAH 84741
435-644-2031
www.ironrockeng.com

HEBER PROJECT
SITE PHOTOMETRIC PLAN DETAILS
HEBER CITY, UTAH

INITIAL SUBMITTAL: 8/1/2023

REV#:	DATE:	DESCRIPTION:

ALL PLANS, CONSTRUCTION DOCUMENTS, RENDERINGS, MODELS, DESIGN CONCEPTS, AND SO FORTH CONSTITUTE INTELLECTUAL PROPERTY OF IRON ROCK ENGINEERING & DESIGN, LLC, AND ARE PROPERTIES AND OF COPYRIGHT PROTECTED UNDER SECTION 102 OF THE COPYRIGHT ACT (TITLE 17 OF THE UNITED STATES CODE). AS SUCH, NO PART OF THESE PLANS MAY BE REPRODUCED, DISTRIBUTED, PUBLISHED, OR REDISPLAYED, DISPLAYED IN ANY WAY, IN WHOLE OR IN PART, WITHOUT PRIOR WRITTEN AGREEMENT FROM IRON ROCK ENGINEERING & DESIGN, LLC. ANY USE OF COPYRIGHT AND IS EXPRESSLY PROHIBITED.

DRAWN BY: GA
SCALE: NTS
SHEET: E5.1