HEBER CITY CORPORATION
75 North Main Street
Heber City, UT 84032
Planning Commission Meeting *Amended

July 9, 2024

6:00 p.m. – Regular Meeting

-Time and Order of Items are approximate and may be changed as Time Permits-

Public notice is hereby given that the monthly meeting of the Heber City Planning Commission will be in the Heber City Office Building, 75 North Main, South door, in the Council Chambers upstairs.

1. Regular Meeting:

I. Call to Order

II. Roll Call

III. Pledge of Allegiance: By Invitation

IV. Prayer or Thought: By Invitation

V. Recuse for Conflict of Interest

2. Consent Agenda:

I. 06.11.2024 Draft Minutes for PC Approval

3. Action Items:

I. Public Hearing to discuss potential updates to the Sign Code regarding the Amount of Required Landscaping around Free-Standing Monument Signs (Planner Jacob Roberts)

II. Request for a Site Plan and CUP approval for Wasatch County Courts Expansion (Planner Aubrey Larsen)

III. Amendment to the Annexation Policy Plan

4. Work Meeting:

I. Planning CommissionTraining - https://www.youtube.com/watch?v=K_8etqfOAd0

5. Administrative Items:

I. City Council Communication Item

6. Adjournment:

Ordinance 2006-05 allows Commission Members to participate in meetings via telecommunications media.

In accordance with the Americans with Disabilities Act, those needing special accommodations during this meeting or who are non-English speaking should contact Meshelle Kijanen at the Heber City Offices at 435.657.7898 at least eight hours prior to the meeting.

Posted on 07.02.2024, in the Heber City Municipal Building located at 75 North Main, the Heber City Website at www.heberut.gov, and on the Utah Public Notice Website at http://pmn.utah.gov. Notice provided to the Wasatch Wave.

HEBER CITY CORPORATION
75 North Main Street
Heber City, UT 84032
Heber City Council Meeting
June 11, 2024

DRAFT Minutes

6:00 p.m. – Regular Meeting

1. Regular Meeting:

I. Call to Order

Chairman Gunn called the Planning Commission Meeting to order at 6:06 PM and welcomed everyone present.

II. Roll Call

Planning Commission Present:	Chairman Dennis Gunn Vice-Chairman Dave Richards Commissioner Tori Broughton Commissioner Robert Wilson Alternate Commissioner Jami Hewlett
Planning Commission Absent:	Commissioner Phil Jordan Commissioner Josh Knight Commissioner Darek Slagowski
Staff Present:	Planner Jacob Roberts Planning Office Admin Meshelle Kijanen City Engineer S. Ross Hansen
Staff Participating Remotely:	Planner Aubry Larsen
Also Present:	Kent Buie
Also Attending Remotely:	Marian Crosby

III. Pledge of Allegiance: By Invitation

Commissioner Tori Broughton led the recitation of the Pledge of Allegiance.

IV. Prayer or Thought: By Invitation

Commissioner Dave Richards led the Commission in a prayer.

V. Recuse for Conflict of Interest: N/A

2. Consent Agenda:

I. 05.28.2024 Draft Minutes for Approval

Motion: Vice-Chairman Richards moved to approve the 05.28.2024 Draft Minutes. Commissioner Wilson made the second.

Discussion: N/A

Voting Yes: Chairman Gunn, Vice-Chairman Richards, Commissioner Wilson, Commissioner Broughton, Alternate Commissioner Hewlett.

Voting No: None. The Motion Passed 5-0.

3. Action Items:

I. Old Mill Village - Site Plan (Planner Larsen - Engineer Horrocks Engineering)

Planner Larson explained this item and oriented the Commission to the location of the site. She stated the General Plan designation was Southtown and it was zoned C-2 Commercial, and explained the proposal was to transform it from a two-lot commercial subdivision into a twelve-unit mixed-use commercial development, with limited residential. She stated this was a request for site plan approval, and gave some history on the application.

Planner Larson said that this had previously been approved as a commercial development and added that it sat at 1.98 acres. She reported in February of that year, it had been reviewed by DRM and met general requirements, though Staff had identified some issues, which the applicant had since addressed.

Planner Larson discussed parking. She reported that the proposed project included 83 commercial parking spots and 24 residential parking spaces, for a total of 107. She said the applicant anticipated ample parking being available and explained the specific parking requirements were not currently known, since there were not yet specific commercial uses identified in the site plan.

Planner Larson also spoke about density. She said the apartments and townhomes in the plan exceeded the 8.86 ERUs which had previously been approved, and this amendments would increase the ERU by one ERU per acre.

Planner Larson addressed the Affordable Housing Plan and stated that the proposed amendment designated 13.7% of the overall project to be affordable housing, thus meeting the 10% affordable housing requirement.

Planner Larson summarized that Staff recommended approval of this plan and found it to be consistent with the General Plan, Municipal Code, and MDA. She added it was subject to all requirements of the City Engineer, Fire Department, Planning Commissionand City Code, and Staff additionally needed verification of the Affordable Housing Plan for review and approval. Planner Larson then shared some of the drawings of the site plan and the lots in question, as well as the grading and

photometric plan.

Applicant Kent Buie introduced himself and spoke about the project briefly. He reported leasing was moving forward and briefly discussed the history of the parcels. He said they wanted to have three stories in each building and have a total of twelve units. On the first and second floor, they hoped to have commercial and retail with residential on the third floor. Mr. Buie explained they did not want to be the long term owner of the buildings; their plan was to ultimately sell them off to individual users. He added they were careful to be in compliance with all City and Fire Codes since they would allow the final users to determine the interior design of the buildings. Mr. Buie also noted some elements of their Affordable Housing Plan was somewhat up in the air since they did not yet know who the final user or renter of the buildings would be. He expressed they wanted to work with Staff to finalize the plan and work through some minor issues.

Chairman Dennis Gunn asked about the market for a product like this, and commented it was a popular model. Mr. Buie agreed it was very popular and noted that the Commons and Quins Junction both had a similar models that had been successful and well-recieved by the community.

Alternate Commissioner Jami Hewlett asked Mr. Buie if he was the original builder on the project. Mr. Buie replied he was the master developer and owned all of the land, and had worked with the Fourplex Investment Group (FIG) to get the entitlement.

Alternate Commissioner Hewlett asked for clarification about the original development that was zoned for commercial use and asked why Mr. Buie needed more density. Mr. Buie explained he was the representative of the land that he held which had not been transferred to FIG. He discussed how process had taken about three years since it was a relatively pioneering concept for a C-2 zone, which generally did not allow residential. He explained how they had needed to create an MDA to allow for the residential additions. Alternate Commissioner Hewlett pointed out they already were exceeding the ERUs and felt the original recommendation of all commercial was a better concept. She stated there were already a lot of residential areas in the valley, but not a lot of commercial. She worried about the increase to density.

Mr. Buie spoke about how commercial sales tax revenue was decreasing in the City and explained how adding residential spaces would make the development more viable. Mr. Buie said due to decreasing revenues, there were less business owners looking to rent out brick-and-mortar stores in the City. Alternate Commissioner Hewlett disagreed, and noted she herself was a business owner who was looking for a commercial space to rent. Mr. Buie acknowledged this point, though stated that his buildings were geared towards small businesses which was a harder sell. He also pointed out they were hoping to sell the entire building, meaning the new owner would need to find several businesses to rent out all of the spaces.

Alternate Commissioner Hewlett stated the area was not zoned for residential. Vice-Chairman Dave Richards explained that in a mixed-use zone, the bottom floors had to be commercial or retail spaces, and then residential units could go above them. Chairman Gunn explained the reason it was brought before the Commission was because of the increase in density, not a change to the zone. Chairman Gunn elaborated that any change to an MDA meant that it needed to come back to the Planning Commission. Alternate Commissioner Hewlett asked for further clarification and she, Vice-Chairman Richards, and Chairman Gunn briefly discussed the applicant's request further.

Vice-Chairman Richards asked how many total units there would be and Mr. Buie said there would be one six units on each lot, with twelve total. Vice-Chairman Richards then asked for clarification about how the plan met the Affordable Housing Plan. Vice-Chairman Richards read from the plan, which stated there were 17 deed-restricted townhomes and eight deed-restricted apartments for affordable housing, and that the affordable housing units constituted 23 ERUs. Mr. Buie explained how he had calculated that figure, and said the Affordable Housing Plan required them to have 15% affordable housing. Vice-Chairman Richards noted on their end, their document stipulated 10% must be affordable housing. Vice-Chairman Richards and Mr. Buie discussed this discrepancy. Vice-Chairman Richards said it was confusing to determine the affordable housing percentage at this point since the plan was not finalized and these numbers were estimates.

Vice-Chairman Richards discussed how he had proposed a similar development many years ago when he was a developer, and he had not been approved due to concerns over parking. He pointed out his plan had been less dense than this one and wondered what the distinction was between his plan and Mr. Buie's. He did agree it was a great concept and acknowledged the need for more housing in the area. He asked City Engineer Ross Hansen what Engineering's perspective about housing was in regard to this plan, and specifically wondered if Engineering felt they had enough parking.

Alternate Commissioner Hewlett brought up concerns about traffic and school enrollment figures if they increased the density. She expressed her desire to protect the second-home owners who had property in Heber City. She thought people could live elsewhere, like Park City. She asked Mr. Buie if there could be multiple owners of a building and Mr. Buie said there could not be, it could only be one owner. Alternate Commissioner Hewlett then asked if the top floor would always be resdiental and Mr. Buie said the owner did not have to make the top residential, it was an option. Mr. Buie said they would comply with the Code as far as affordable housing went and confirmed that the floor plan was the same in every building.

Commissioner Tori Broughton asked about the terms for the low-income housing. Mr. Buie said it was based on a percentage of the average monthly income. Alternate Commissioner Hewlett asked how long was the affordable housing units were deed-restricted and Mr. Buie said each lot was the legal lot, and said it divided vertically, not per floor. Commissioner Hewlett asked for clarity if the owner of the affordable housing unit could then sell it at market value and Mr. Buie explained the unit would not be available to be sold individually, since the entire building was not able to be split up. Alternate Commissioner Hewlett asked how long that went on for and Mr. Buie said it would be affordable in perpetuity.

Commissioner Broughton asked about how deliveries for the commercial businesses would work and Mr. Buie indicated where their easements were located and elaborated on how the private roads in the development would connect to City roads. He reported they had just completed their Traffic Study, which had indicated their plan needed just minor adjustments. He added there were sufficient points of egress and ingress. Mr. Buie also noted the owners had a lot of planning flexibiltuy and could add features like elevators and more points of access for their commercial tenants. He summarized this was essentially a shell design.

Vice-Chairman Richards asked if the Fire Department had reviewed this layout and City Engineer Hansen replied that they had, and had not identified any concerns. City Engineer Hansen made some comments about the Engineering review and reported that Engineering was comfortable with the project as long as their requirements were met, which he noted was a condition of approval for the plan.

Vice-Chairman Richards clarified that this met the City Code and the intent of the Code. He pointed out the amendment added another ERU per acre. He said he was not clear on why they needed an extra ERU per acre at this stage, when it was still not clear what the affordable housing percentage would be. Vice-Chairman Richards summarized the findings and conditions which needed to be met, and opined there were no major changes that he thought needed to be made. He thought adding one more ERU per acre was acceptable, especially if it meant they could get smaller units that would better serve the community. Commissioner Broughton pointed out they were just approving the additional ERU, but it did not necessarily mean that each building would end up adding the extra ERU. Vice-Chairman Richards expressed that he was willing to move this item forward, and trusted the Staff's opinion if they were issuing a positive recommendation.

Chairman Gunn explained the process of how Planning Codes were approved and said those Codes governed the parameters for Staff and Engineering. He explained the Planning Commission made recommendations to City Council, who then approved or denied those recommendations. Chairman Gunn added it was Staff's job to determine that this project followed all City guidelines. He said regardless of if the ERUs changed or not, it would need to come before the Planning Commission and City Council for final approval of their design and layout. He explained the project needed to be re-vetted because they had proposed a change to the MDA, and noted projects like this could come before the Planning Commission several times before they were approved.

Commissioner Broughton asked if there was an open space requirement in the C-2 zone. Planner Larson replied there was a requirement in the MDA for open space, and reported that requirement had been met.

Motion: Planning Commission Vice-Chair Richards moved to approve the Old Mill Village Site Plan, subject to two findings and five conditions as identified by Staff. He highlighted condition number one, which was that both Staff and the City Attorney approve that the plan meet the MDA requirements. Commissioner Wilson made the second.

Discussion: N/A

Voting Yes: Chairman Gunn, Vice-Chairman Richards, Commissioner Wilson, Commissioner Broughton.

Voting No: Alternate Commissioner Hewlett. The Motion Passed 4-1.

4. Work Meeting: N/A

5. Administrative Items: N/A

I. ~~City Council Communication Item~~

6. Adjournment:
Motion: Commissioner Wilson moved to Adjourn. Alternate Commissioner Hewlett made the second.

Discussion: N/A

Voting Yes: Commissioner Gunn, Planning Commission Vice-Chair Richards, Commissioner Wilson, Commissioner Broughton, Alternate Commissioner Hewlett.

Voting No: None. The Motion Passed 5-0.

_____
Meshelle Kijanen, Administrative Assistant

DRAFT

DRAFT

Planning Commission Staff Report

MEETING DATE:	7/9/2024
SUBJECT:	Public Hearing to discuss potential updates to the Sign Code regarding the Amount of Required Landscaping around Free-Standing Monument Signs (Planner Jacob Roberts)
RESPONSIBLE:	Jacob Roberts
DEPARTMENT:	Planning
STRATEGIC RELEVANCE:	Community Development

SUMMARY

Staff is exploring a potential change to the sign code. This potential change has been brought about by a situation with a monument sign located at 500 South Main Street. Staff is looking to discuss one possible change to the sign code to allow more flexibility for monument signs that are located along major thoroughfares in the city.

RECOMMENDATION

Staff recommends referring the matter to the planning commission to amend the code for the landscaping required for monument signs.

BACKGROUND

Jeremy Smith and Spencer Coleman are currently in the process of receiving approval for a monument sign located at 5th & Main. The applicant is aiming to keep the building facade sign free by using a modest monument sign on the property. As the code stands, 6 feet of landscaping is required around this sign. The landscaping requirement is increased from the standard 3 feet because of the sign's location on a major city thoroughfare. Because of the nature of the building and its setbacks, it is very challenging to accommodate a 6-foot landscaping buffer around the proposed monument sign.

DISCUSSION

The proposed code change would simply eliminate the increased landscaping requirement and maintain a requirement of 3 feet of landscaping around all monument signs in the city. No other change is recommended. This change is prudent for this specific project, but also clears up a

contradiction in the code. The Municipal Code requires a 3-foot setback for all monument signs. This setback is effectively increased to 6 feet along major thoroughfares due to the increase in landscaping. The code is written in such a way that this requirement is unclear and therefore difficult to plan for in the preliminary plans for the building. The de-facto 6-foot setback also creates difficulty when attempting to decrease building setbacks along Main Street and other roads in the commercial districts of the city, as 6 feet of landscaping is required around the circumference of the sign, greatly increasing the required square footage for the sign and accompanying landscaping.

FISCAL IMPACT

N/A

CONCLUSION

Staff is exploring a potential change to the sign code prompted by issues with a monument sign at 500 South Main Street. The proposal would allow more flexibility for monument signs along major thoroughfares by changing the code to reduce the required landscaping from 6 feet to 3 feet. Jeremy Smith and Spencer Coleman are seeking approval for a monument sign at 5th & Main, aiming to forgo major building facade signage. The current code's 6-foot landscaping requirement is challenging due to building setbacks, prompting the recommended change to clarify and simplify regulations while accommodating specific project needs and eliminating a code contradiction. Staff recommends a positive recommendation to the city council regarding this proposal.

ALTERNATIVES

Staff Recommended Option - Approval

I move to **approve** the item as presented, with the findings and conditions as presented in the conclusion above.

Alterntive 2 - Continuance

I move to **continue** the item to another meeting on , with direction to the applicant and/or Staff on information and / or changes needed to render a decision, as follows:

Alternative 3 - DENIAL
I move to **deny** the item with the following findings.

POTENTIAL MOTIONS

ACCOUNTABILITY

Department: Planning
Staff member: Jacob Roberts, Planner

EXHIBITS

1. Ord 2024.14 Monument Landscape Signs

ORDINANCE NO. 2024-14

AN ORDINANCE ADOPTING UPDATES TO SIGNS section 18.104.050 Monument/Landscape Signs.

BE IT ORDAINED by the City Council of Heber City, Utah, that Heber City Municipal Code Chapter 18.104.050 SIGNS is amended and is adopted as set forth in Exhibit A, attached hereto and incorporated herein.

WHEREAS, The City Council of Heber City, Utah recognizes the need to modify the landscape requirements for monument signs as outlined in the Heber City Municipal Code, aiming to reduce the regulatory burden on business owners concerning mandatory landscaping around monument signs.

If any section, subsection, sentence, clause, phrase, or portion of this Ordinance is, for any reason, held invalid or unconstitutional by any court of competent jurisdiction, such provision shall be deemed a separate, distinct, and independent provision, and such holding shall not affect the validity of the remaining portions of this Ordinance.

If any provisions of the Heber City Code heretofore adopted are inconsistent herewith they are hereby repealed.

To the extent that any ordinances, resolutions, or policies of Heber City materially conflict with the provisions of this Ordinance, they are hereby amended to comply with the provisions hereof.

This Ordinance shall take effect immediately upon passage.

PASSED, APPROVED and ORDERED TO BE PUBLISHED BY THE HEBER CITY COUNCIL this _____ day of _____ 2024.

	AYE	NAY	ABSENT	ABSTAIN
Yvonne Barney	_____	_____	_____	_____
Aaron Cheatwood	_____	_____	_____	_____
Michael Johnston	_____	_____	_____	_____
Sid Ostergaard	_____	_____	_____	_____
D. Scott Phillips	_____	_____	_____	_____

APPROVED:

_____
Mayor Heidi Franco

ATTEST:

_____ Date: _____
RECORDER

Exhibit A

18.104.050 Monument/Landscape Signs

Sign Type	Configuration	Components	Where Allowed
Low Profile/Monument types: Shall be complementary to the adjacent building(s) in material and color. All monument signs must include a masonry (or stone) base (between 1'0" and 2'0" in height). One for every 200' of frontage	Height and width: The sign must not exceed 10' in height from its site grade or from the nearest public right of way. Location: The sign shall be placed in a minimum of 3'0" from the public right of way, with a minimum of 100' between monument signs. Signs shall be set back at least their height or width (whichever is greater) from any adjoining side property line. May include physically changeable copy and such signs are subject to clear view provisions (see D (2))	Context and setting: Monument signs shall have a minimum of 3'0" of landscaping ~~(a minimum of 6'0" if along a major thoroughfare)~~ around the base of the sign, including shrubs, flowers, and ground cover. Structural support poles shall be concealed, unless used as a decorative element of the sign.. The maximum square footage of the sign (not including the masonry base) shall not exceed 30% of the street frontage length (example: 100 linear feet x 30% = 30 sq. ft.), with a maximum of 100 sq. ft. Lighting: Monument signs shall be externally illuminated, without glare to passersby and downward directed and shielded to prevent light spillage onto the roadway or use individually constructed letters with internal lighting (all wiring, mounting brackets, bolts, tracks, etc., shall not be visible).	C-2, C-4, I-1, I-2, BMP, CMP, PF, MURCZ, MCZ, RC, PC, NVOZ Permitted in all residential zones as part of the subdivision approval process when utilized for a neighborhood identification sign and for existing neighborhoods with a known identity, except height shall be limited to 6'.

Planning Commission Staff Report

MEETING DATE:	7/9/2024
SUBJECT:	Request for a Site Plan and CUP approval for Wasatch County Courts Expansion (Planner Aubrey Larsen)
RESPONSIBLE:	Aubrey Larsen
DEPARTMENT:	Planning
STRATEGIC RELEVANCE:	Community Development

SUMMARY

This is an action item to approve the Wasatch County Courts Expansion Site Plan and to approve the applicant's request for a Conditional Use Permit (CUP). Policy questions include the following:

- Should a Site Plan be approved for the Wasatch County Courts Expansion?
- Should a CUP be granted for the Wasatch County Courts Expansion?

RECOMMENDATION

Staff recommends that the Planning Commission approve the Wasatch County Courts Expansion Site Plan, subject to findings and conditions. Additionally, the staff recommends that the Planning Commission approve the applicant's request for a Conditional Use Permit (CUP), subject to findings and conditions.

BACKGROUND

This project is an expansion of the County and State Courts wing at the Wasatch County Justice Center located at 1364 US-40. The current zoning is C-2* The total lot area is 16.22 acres with an existing building footprint of 45,690 sq ft and a proposed courts expansion of 19,885 sq ft for a total of 65,575 sq ft.

* Note that the applicant has applied for a zoning map amendment to change the zoning to the Institutional and Public Facilities Zone. Upon review, the application generally meets both C-2 and IPF zone requirements.

The Wasatch County Courts Expansion Commercial Concept was reviewed by DRM on February 7th, 2024. Discussion focused on details of the project's architectural and engineering aspects,

including the renovation of the existing building, parking arrangements for both public and staff, and the proposed addition of new courtrooms and attorney's offices. Clarification was provided regarding specific design considerations, including the incorporation of a dedicated turn lane based on a traffic study, the absence of food preparation facilities, and the installation of a pond to the north of the site.

The Site Plan was reviewed by DRM on April 17th, 2024 at which time staff requested corrections to meet zoning and design standards including landscape and lighting specifications, parking analysis, and engineering requirements. It was clarified that a Conditional Use Permit (CUP) is necessary to meet C-2 zoning requirements due to the parcel and building footprint size.

Engineering has provided a letter outlining the steps needed to move into the construction process including coordination with the Planning Department, submission of water rights/shares, a finalized Performance Agreement, and an Engineers Estimate for necessary improvements. It also outlines requirements for bond(s), an Inspection Deposit, and a Preconstruction Meeting before construction can begin, as well as the submission of a signed Wasatch County Weed Control Plan.

DISCUSSION

Key considerations for this project include compliance with zoning and design requirements - particularly landscaping, lighting, and the C-2 Design Guidelines; compliance with engineering and performance requirements as outlined in the attached engineering letter; and approval of the CUP as per C-2 requirements.

FISCAL IMPACT

N/A

CONCLUSION

Staff recommends that the Planning Commission approve the **Wasatch County Courts Expansion Site Plan** subject to findings and conditions:

Findings
1. The application is consistent with the Municipal Zoning Code.
2. The application is consistent with the General Plan.

Conditions:
1. All requirements of the City Engineer shall be met.
2. All other Code Requirements shall be met.
3. Any other conditions or changes as articulated by the Planning Commission

Staff recommends that the Planning Commission approve the request for a **Conditional Use Permit (CUP)** subject to findings and conditions.

Findings
1. The application is consistent with the Municipal Zoning Code.

2. The application is consistent with the General Plan.
3. The proposed conditional use shall comply with City ordinancesFederal and State Law as applicable to the site where the conditional use is located.

Conditions
1. All requirements of the City Engineer shall be met.
2. All other Code Requirements shall be met.
3. Any other conditions or changes as articulated by the Planning Commission.

ALTERNATIVES

Staff Recommended Option - Approval

I move to **approve** the item as presented, with the findings and conditions as presented in the conclusion above.

Alterntive 2 - Continuance

I move to **continue** the item to another meeting on , with direction to the applicant and/or Staff on information and / or changes needed to render a decision, as follows:

Alternative 3 - DENIAL

I move to **deny** the item with the following findings.

POTENTIAL MOTIONS

ACCOUNTABILITY

Department: Planning
Staff member: Aubrey Larsen , Planning Consultant

EXHIBITS

1. 1-DW CourthouseExp Const 240626 S
2. 2-WCCE - A201 WCCE BUILDING ELEVATIONS
3. 3-Wasatch County Courts Expansion Site Plan -Planning Review Checklist
4. 4-LT WasCthouseExp Drawing Acknowledge 240626
5. 5-Wasatch County Courts PC Pres

WASATCH COUNTY COURTS EXPANSION

DISCIPLINES INCLUDED

REVISED COMMERCIAL SITE PLAN APPLICATION DRAWING SET
23 MAY 2024
REVISION DATE 17 JUNE 2024

ARCHITECT	EDA	9 EXCHANGE PLACE, SUITE 1100 SALT LAKE CITY, UTAH 84111 801 531 7600 www.edaarch.com
CIVIL	ENSIGN	45 WEST SEGO LILY DR., SUITE 500 SANDY, UTAH 84070 801 255 0529 www.ensigneng.com
LANDSCAPE	ARCSITIO	1058 EAST 2100 SOUTH SALT LAKE CITY, UTAH 84106 801 487 4923 www.arcsitiodesign.com
STRUCTURAL	REAVELEY ENGINEERS	515 EAST 100 SOUTH, SUITE 1200 SALT LAKE CITY, UTAH 84102 801 505 4016 www.reaveley.com
MECHANICAL	VBFA	181 EAST 5600 SOUTH MURRAY, UTAH 84107 801 530 3148 www.vbfa.com
ELECTRICAL	BNA CONSULTING	4225 LAKE PARK BOULEVARD, SUITE 275 WEST VALLEY CITY, UTAH 84120 801 532 2196 www.bnaconsulting.com

STATE OF UTAH
THOMAS S. BRENNAN
07-201102-0301
LICENSED ARCHITECT

PROFESSIONAL ENGINEER
556[illegible]061
KODY J. MORGAN
04/24/2024
STATE OF UTAH

LICENSED PROFESSIONAL ENGINEER
No. 8325442-2202
JACOB D. BECK
05-28-24
STATE OF UTAH

INDEX OF DRAWINGS

G 000 TITLE SHEET

G 001 ALTA SURVEY 1 OF 2
G 002 ALTA SURVEY 2 OF 2

C-001 CIVIL GENERAL NOTES
C-100 CIVIL DEMOLITION PLAN
C-200 CIVIL SITE PLAN
C-300 GRADING PLAN
C-301 DRAINAGE PLAN
C-400 CIVIL UTILITY PLAN
C-500 EROSION CONTROL PLAN
C-600 DETAILS
PP-01 PLAN AND PROVILE

L-L100 LANDSCAPE NOTES
L-L101 LANDSCAPE PLAN
L-L501 LANDSCAPE DETAILS
L-R100 IRRIGATION NOTES
L-R101 IRRIGATION PLAN
L-R401 ENLARGED IRRIGATION PLAN
L-R402 ENLARGED IRRIGATION PLAN
L-R501 IRRIGATION DETAILS
L-R502 IRRIGATION DETAILS

A001 ARCHITECTURAL SITE PLAN

P101 PLUMBING PLAN
P501 PLUMBING DETAILS

ES1 SITE LIGHTING SCHEDULES AND DIAGRAMS
ES2 PHOTOMETRIC SITE PLAN

E D
A

[A] The Boston Building
9 Exchange Place, Ste 1100
Salt Lake City, Utah 84111

[O] 801 531 7600

[E] info@edaarch.com

[W] www.edaarch.com

PROJECT ARCHITECT	JB
PROJECT MANAGER	SH

WASATCH COUNTY
COURTS EXPANSION

1361 US-40
HEBER CITY, UTAH 84032

PROJECT NUMBER		223053
#	DESCRIPTION	DATE
	DD SET	02.28.24
	PERMIT REVIEW SET	04.24.24

TITLE SHEET

G000

23 MAY 2024 © EDA

REVISION DATE 17 JUNE 2024

4/22/2024 2:43:10 PM

811 Know what's below. Call before you dig.

CALL BLUESTAKES @ 811 AT LEAST 48 HOURS PRIOR TO THE COMMENCEMENT OF ANY CONSTRUCTION.

BENCHMARK

NORTH QUARTER CORNER OF SECTION 8, TOWNSHIP 4 SOUTH, RANGE 5 EAST SALT LAKE BASE AND MERIDIAN (FOUND BRASS CAP)

ELEV = 5664.36'

SURVEYOR'S NARRATIVE

I, Patrick M. Harris do hereby state that I am a Professional Land Surveyor and that I hold certificate no. 286882 as prescribed by the laws of the State of Utah and represent that I have made a survey of the following described property. The Purpose of this survey is to provide an ALTA/NSPS Land Title Survey for use by the client. The Basis of Bearing is the line between the North Quarter Corner and the Witness Corner of the North West Corner of Section 8, Township 4 South, Range 5 East, Salt Lake Base and Meridian, measuring South 87°43'03" West 2660.11 feet.

COMMITMENT DESCRIPTIONS

The Land is described as follows:

COMMENCING AT A POINT HAVING STATE PLANE RECTANGULAR COORDINATES OF X=2,024,754.93 AND Y=786,141.08 (BASED ON THE LAMBERT CONFORMAL PROJECTION, UTAH CENTRAL ZONE), SAID POINT ALSO BEING SOUTH 430.16 FEET AND EAST 761.46 FEET FROM THE NORTHWEST CORNER OF SECTION 8, TOWNSHIP 4 SOUTH, RANGE 5 EAST, SALT LAKE BASE AND MERIDIAN, AS EVIDENCED BY A WASATCH COUNTY BRASS CAP MONUMENT HAVING STATE PLANE RECTANGULAR COORDINATES OF X=2,023,993.69 AND Y=786,571.12 (BASED ON THE LAMBERT CONFORMAL PROJECTION, UTAH CENTRAL ZONE), THENCE NORTH 89°34'09" EAST ALONG A FENCE LINE 757.56 FEET; THENCE SOUTH 02°44'44" EAST ALONG A FENCE LINE 16.5 FEET; THENCE SOUTH 89°55'29" EAST ALONG A FENCE LINE 972.53 FEET; THENCE SOUTH 81°21'53" EAST ALONG A FENCE LINE 178.71 FEET; THENCE SOUTH 00°01'12" EAST ALONG A FENCE LINE 877.85 FEET; THENCE SOUTH 89°52'45" WEST ALONG A FENCE LINE 1015.95 FEET; THENCE NORTH 00°06'38" WEST ALONG A FENCE LINE 150.07 FEET; THENCE SOUTH 89°47'17" WEST ALONG A FENCE LINE 270.19 FEET; THENCE NORTH 11°04'12" EAST 329.04 FEET TO THE TRUE POINT OF BEGINNING OF THIS DESCRIPTION; THENCE SOUTH 20°05'35" WEST 111.98 FEET; THENCE SOUTH 45°00'00" WEST 87.00 FEET; THENCE NORTH 45°00'00" WEST 133.00 FEET; THENCE NORTH 21°00'00" WEST 55.00 FEET; THENCE NORTH 00°00'00" EAST 280.12 FEET; THENCE NORTH 90°00'00" EAST 75.00 FEET; THENCE SOUTH 43°39'15" EAST 95.45 FEET; THENCE SOUTH 00°00'00" EAST 40.41 FEET; THENCE NORTH 90°00'00" EAST 61.45 FEET; THENCE NORTH 00°00'00" EAST 40.41 FEET; THENCE NORTH 90°00'00" EAST 16.29 FEET; THENCE SOUTH 00°00'00" EAST 39.83 FEET; THENCE NORTH 90°00'00"

EAST 5.00 FEET; THENCE SOUTH 00°00'00 EAST 8.25 FEET; THENCE NORTH 90°00'00" EAST 44.87 FEET; THENCE SOUTH 00°00'00"EAST 22.67 FEET; THENCE NORTH 90°00'00" WEST 8.66 FEET; THENCE SOUTH 00°00'00" EAST 55.05 FEET; THENCE SOUTH 45°00'00 EAST 12.64 FEET; THENCE SOUTH 45°00'00" WEST 77.83 FEET TO THE TRUE POINT OF BEGINNING OF THIS DESCRIPTION.

SUBJECT TO THE EFFECTS OF A BOUNDARY LINE AGREEMENT RECORDED 10 JANUARY 2019 AS ENTRY NO. 464505

ABOVE PROPERTY ALSO DESCRIBED BY SURVEY FILED AS #4030 AS FOLLOWS:

BEGINNING AT A POINT WHICH IS SOUTH 01°12'51" EAST 467.61 FEET FROM THE NORTH QUARTER CORNER OF SECTION 8, TOWNSHIP 4 SOUTH, RANGE 5 EAST, SALT LAKE BASE AND MERIDIAN; THENCE AS FOLLOWS: SOUTH 00°01'12" EAST 33.09 FEET ALONG A FENCE LINE; THENCE NORTH 81°19'05" WEST 180.27 FEET; THENCE NORTH 89°44'08" WEST 523.33 FEET; THENCE SOUTH 627.49 FEET; THENCE SOUTH 51°05'17" WEST 156.42 FEET; THENCE SOUTH 89°47'17" WEST 462.89 FEET; THENCE NORTH 38°54'43" WEST

989.34 FEET ALONG THE NORTHEASTERLY BOUNDARY OF US HIGHWAY 40; THENCE NORTH 89°34'09" EAST 757.57 FEET; THENCE SOUTH 02°44'44" EAST 16.50 FEET ALONG A FENCE LINE; THENCE SOUTH 89° 55'29" EAST 972.53 FEET ALONG A FENCE LINE; THENCE SOUTH 81°21'53" EAST 178.71 FEET ALONG A FENCE LINE TO THE POINT OF BEGINNING.

TOGETHER WITH AND SUBJECT TO:

A 50 FOOT WIDE EASEMENT AS APPURTENANT TO SUBJECT PARCEL FOR INGRESS AND EGRESS, SEWER, DRAINAGE, AND UTILITY PURPOSES LYING 25 FEET ON EACH SIDE AS CREATED IN UNDERLYING LEASE AGREEMENT RECORDED AUGUST 20, 2003 AS ENTRY NO. 262045 IN BOOK 648 AT PAGE 59 OF OFFICIAL RECORDS, BEING MORE PARTICULARLY DESCRIBED AS FOLLOWS:

COMMENCTNG AT A POINT HAVING A STATE PLANE RECTANGULAR COORDINATES OF X=2,024,754.93 AND Y=786,141.08 (BASED ON THE LAMBERT CONFORMAL PROJECTION, UTAH CENTRAL ZONE), SAID POINT ALSO BEING SOUTH 430.16 FEET; AND EAST 761.46 FEET FROM THE NORTHWEST CORNER OF SECTION 8, TOWNSHIP 4 SOUTH, RANGE 5 EAST, SALT LAKE BASE AND MERIDIAN; AS EVIDENCED BY A WASATCH COUNTY BRASS CAP MONUMENT HAVING STATE PLANE RECTANGULAR COORDINATES OF X=2,023,993.69 AND Y=786,571.12 (BASED ON THE LAMBERT CONFORMAL PROJECTION, UTAH CENTRAL ZONE); THENCE NORTH 89°34'09" EAST ALONG A FENCE LINE 757.56 FEET; THENCE SOUTH 02°44'44" EAST ALONG A FENCE LINE 16.5 FEET; THENCE SOUTH 89°55'29" EAST ALONG A FENCE LINE 972.53 FEET; THENCE SOUTH 8°21'53" EAST ALONG A FENCE LINE 178.71 FEET; THENCE SOUTH 00°01'12" EAST ALONG A FENCE LINE 877.85 FEET; THENCE SOUTH 89°52'45" WEST ALONG A FENCE LINE 1015.95 FEET; THENCE NORTH 00°06'38" WEST ALONG A FENCE LINE 150.07 FEET; THENCE SOUTH 89°47'17" WEST ALONG A FENCE LINE 270.19 FEET; THENCE NORTH 38°54'43" WEST 798.25 FEET ALONG A FENCE TO THE TRUE POINT OF BEGINNING OF THIS DESCRIPTION; THENCE NORTH 50°54'42" EAST 134.29 FEET TO THE BEGINNING OF A TANGENT CURVE CONCAVE TO THE SOUTH AND HAVING A RADIUS OF 76.00 FEET; THENCE EASTERLY ALONG SAID CURVE AN ARC LENGTH OF 51.85 FEET; THENCE NORTH 90°00'00" EAST 290.02 FEET TO A POINT ON A NON-TANGENT CURVE CONCAVE TO THE SOUTHWEST AND HAVING A RADIUS OF 72.02 FEET; A RADIAL LINE TO SAID POINT BEARS NORTH 00°1221" EAST; THENCE SOUTHEASTERLY ALONG SAID NON-TANGENT CURVE AN ARC LENGTH OF 174.63 FEET; THENCE SOUTH 43°51'48" WEST 55.84 FEET TO A POINT ON A LINE IN THE ABOVE DESCRIBED PARCEL 4 HAVING A BEARING OF SOUTH 43°39'15" EAST DISTANT THEREON SOUTH 43°39'15" EAST 35.50 FEET FROM THE NORTHWEST TERMINUS OF SAID LINE.

THE WESTERLY SIDELINES OF THE ABOVE 50 FOOT WIDE EASEMENT ARE TO BE SHORTENED AND PROLONGED SO AS TO TERMINATE IN THE EASTERLY RIGHT OF WAY LINE OF US HIGHWAY 40.

THE SOUTHEASTERLY SIDELINES OF THE ABOVE 50 FOOT WIDE EASEMENT ARE TO BE SHORTENED AND PROLONGED SO AS TO TERMINATE IN A LINE IN THE ABOVE DESCRIBED PARCEL 4 DESCRIBED AS HAVING A BEARING OF SOUTH 43°39'15" EAST.

AS SURVEYED DESCRIPTION

A parcel of land situate in the Northwest Quarter of Section 8, Township 4 South, Range 5 East, Salt Lake Base and Meridian, being more particularly described as follows:

Beginning at a point South 01°12'51" East 467.61 feet from the North Quarter Corner of Section 8, Township 4 South, Range 5 East, Salt Lake Base and Meridian, and running;

thence South 00°01'12" East 33.10 feet;
thence North 81°19'05" West 180.27 feet;
thence North 89°44'08" West 523.32 feet;
thence South 00°57'10" East 398.14 feet;
thence South 08°54'42" West 267.17 feet;
thence South 53°46'02" West 107.79 feet;
thence South 89°47'06" West 194.19 feet;
thence South 00°08'25" East 19.15 feet;
thence South 89°52'56" West 253.66 feet to the east line of U.S. Highway 40;
thence North 38°54'43" West 1,013.36 feet along to the east line of U.S. Highway 40;
thence North 89°34'09" East 757.57 feet;
thence South 02°44'44" East 16.50 feet;
thence South 89°55'29" East 972.53 feet;
thence South 81°21'53" East 178.70 feet to the Point of Beginning.

Contains 706,566 square feet or 16.221 acres.

To: (i)Wasatch County, a Municipal Corporation; (ii)Atlas Title Insurance Agency, Inc.; (iii)First American Title Insurance Company.

This is to certify that this map or plat and the survey on which it is based were made in accordance with 2021 Minimum Standard Detail Requirements for ALTA/NSPS Land Title Surveys, jointly established and adopted by ALTA and NSPS, and includes items 1, 2, 3, 4, 7(a), 7(b)(1), 8, 9, 11, 13,18 and 19 of Table A hereof.

The field work was completed on September 28, 2023.

Date of Plat or Map: January 22, 2024.

2/9/24
Date

Patrick M. Harris
License No. 286882

Note: For conditions of record not shown hereon as well as specific references to items in the title report, please refer to a title report supplied by Atlas Title Insurance Agency, Inc., of Heber, Utah under Commitment No. 501221149, dated effective January 05, 2024.

Note to the client, insurer and lender- With regard to Table A, item 11 source information from plans and markings will be combined with observed evidence of utilities pursuant to Section 5.E.iv. to develop a view of the underground utilities. However, lacking excavation, the exact location of underground features cannot be accurately, completely and reliably depicted. In addition, in some jurisdictions, 811 or other similar utility locate requesters from surveyors may be ignored or result in an incomplete response, in which case the surveyor shall note on the plat or map how this affected the surveyor's assessment of the location of the utilities. Where additional or more detailed information is required, the client is advised that excavation and/or private utility locate request may be necessary.

Schedule B-2 Exceptions

1. (a) Taxes or assessments that are not shown as existing liens by the records of any taxing authority that levies taxes or assessments on real property, or by the Public Records; (b) proceedings by a public agency that may result in taxes or assessments, or notices of such proceedings, whether or not shown by the records of such agency or by the Public Records.
2. Any facts, rights, interest, or claims which are not shown by the Public Records but that could be ascertained by an inspection of the Land or by making inquiry of persons in possession thereof.
3. Easements, claims of easement or encumbrances that are not shown by the Public Records.
4. Any encumbrance, violation, variation, adverse circumstance, boundary line overlap, or encroachment (including an encroachment of an improvement across the boundary lines of the Land), that would be disclosed by an accurate and complete land title survey of the Land and that are not shown in Public Records.
5. a) Unpatented mining claims; (b) reservations or exceptions in patents or in Acts authorizing the issuance thereof;water rights, claims or title to water, whether or not the matters excepted under (a), (b), or (c) are shown by the Public Records.
6. Any lien or right to a lien for services, labor or material, unless such lien is shown by the Public Records at Date of Policy.
7. Any defect, lien, encumbrance, adverse claim, or other matter that appears for the first time in the Public Records or is created, attaches, or is disclosed between the Commitment Date and the date on which all of the Schedule B, Part I–Requirements are met.
8. Taxes for the year 2023 were not assessed against the land because of ownership by a tax exempt entity under Tax ID No. OHE-1655/Parcel No. 00-0009-2127.
9. Subject to the assessments levied by the city of Heber, if any.
10. The property lies within the service District #21, Heber Valley Special Service District, The Wasatch County Fire District, and the Jordanelle Special Service District, and is subject to all assessments levied thereon.(blanket in nature)
11. Access is limited to those openings permitted by the State of Utah as evidenced by that certain agreement for Change of Access Openings recorded 3 December 1985 as Entry No. 137117, in Book 176, at Page 691, of Official Records.(blanket in nature)

    Agreement for Change of Access Openings recorded 29 March 1994 as Entry No. 171969, in Book 275, at Page 453, of Official Records.
12. Unrecorded leasehold estate dated 15 May 1995, by and between Wasatch County, Utah as Lessor and The State of Utah, acting by and through its offices of the Division of Facilities Construction and Management and the State Court Administrator Collectively as Lessee, as disclosed by a Lease Subordination, Attornment and Non- Disturbance Agreement recorded 22 May 1995 as Entry No. 179320, in Book 298, at Page 303, of Official Records.(not survey related)
13. Agreement dated 13 March 1995 by and between Wasatch County and Alan G. Baird, Jill Jasperson and Dan E. Baird for the purpose to obtain easements across the property to construct, operate and maintain sewer and water lines recorded 16 November 1995 as Entry No. 182913, in Book 310, at Page 283, of Official Records.(shown on survey)
14. Notice of Interest wherein it states the following, to wit: Wasatch County Special Service Area No. 1 hereby claims for an unrecorded easement, recorded 21 April 1999 as Entry No. 213186, in Book 421, at Page 121, of Official Records.

    Note: The Wasatch County Water Efficiency Project Pipeline Easements Plat, executed by Central Utah Water Conservancy District recorded 13 June 2003 as Entry No. 259146, in Book 630, at Page 752, of Official Records.

    Notice of Location of Easement recorded 8 August 2006 as Entry No. 305753, in Book 879, at Page 762, of Official Records.

    Assignment of Notice of Location of Easements and Related Easements and Rights-of-Way, recorded 28 April 2015 as Entry No. 411327, in Book 1128, at Page 164, of Official Records.(shown on survey)
15. Resolution No. 99-10, Heber City Special Improvement District recorded 10 November 1999 as Entry No. 219369, in Book 443, at Page 219, of Official Records. (not survey related)
16. Boundary Line Agreement, recorded 10 June 2019 as Entry No. 464505, in Book 1254, at Page 1110, of Official Records.(shown on survey)
17. Notice of Address Change recorded 1 May 2021 as Entry No. 389370, in Book 1080, at Page 383, of Official Records.(not survey related)
18. Subject to disclosures, notes and recitals found in a Survey performed by Great Basin Engineering and recorded as Filing #4030 in the office of the Wasatch County Surveyor's Office.
19. Ground Lease Agreement between Municipal Building Authority of Wasatch County, Utah (Lessee) and Wasatch County, Utah (Lessor), recorded 17 November 2021 as Entry No. 510710, in Book 1385, at Page 824, of Official Records.(not survey related)

    Assignment of Ground Lease Agreement, recorded 17 November 2021 as Entry No. 510711, in Book 1385, at Page 844, of Official Records.
20. A Deed of Trust, Assignment of Rents and Security Agreement dated 1 November 2021 by and between Municipal Building Authority of Wasatch County as Trustor in favor of Atlas Title Insurance Agency, Inc. as Trustee and **Zions Bancorporation, National Association** as Beneficiary, to secure an original indebtedness of $4,700,000.00, recorded 17 November 2021 as Entry No. 510712, in Book 1385, at Page 854, of Official Records.(not survey related)
21. Notice of Master Lease Agreement, recorded 17 November 2021 as Entry No. 510713, in Book 1385, at Page 878, of Official Records.(not survey related)
22. Judgments were checked in the names of Wasatch County, Utah. None were found except as shown above.(not survey related)

TABLE A

1) All monuments used and set are shown on survey.
2) Address is 1361 US-40, Heber, Utah.
3) Subject parcel is located in Zone X AREA OF MINIMAL FLOOD HAZARD, Zone AE 1% ANNUAL CHANCE FLOOD HAZARD , and Zone AE REGULATORY FLOODWAY 2% ANNUAL CHANCE FLOOD HAZARD per FEMA FIRM maps 49051C0256E, and 49051C0257E effective March 15, 2012.
4) Total Parcel contains: 705,942 sq.ft. or 16.210 acres.
5) Shown on survey.
7(a) Exterior dimensions of building are shown on survey.
7(b)(1) Square footage of building at ground level is shown on survey.
8) Substantial features are shown on survey.
9) Subject parcel contains 99 regular parking stalls and 4 ADA parking stalls.
11) Existing utilities are shown on survey.
13) Adjoining owners are shown on survey.
18) All plottable easements are shown on survey.

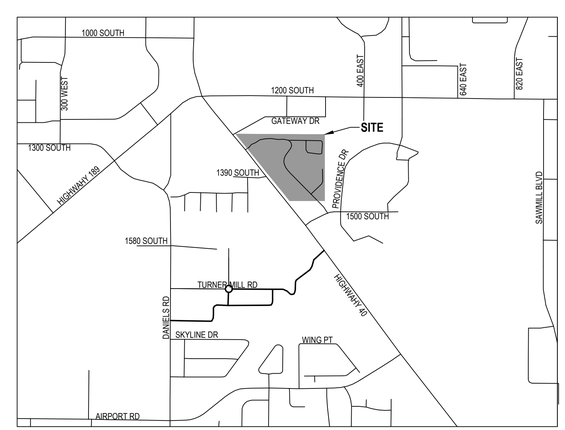

VICINITY MAP
(NOT TO SCALE)

HORIZONTAL GRAPHIC SCALE

50 0 25 50 100
(IN FEET)
HORZ: 1 inch = 50 ft.

LOCATED IN THE NORTH HALF OF SECTION 8 TOWNSHIP 4 SOUTH, RANGE 5 EAST SALT LAKE BASE AND MERIDIAN HEBER CITY, WASATCH COUNTY, UTAH

ENSIGN
THE STANDARD IN ENGINEERING

SALT LAKE CITY
45 W. 10000 S., Suite 500
Sandy, UT 84070
Phone: 801.255.0529

LAYTON
Phone: 801.547.1100

TOOELE
Phone: 435.843.3590

CEDAR CITY
Phone: 435.865.1453

RICHFIELD
Phone: 435.896.2983

WWW.ENSIGNENG.COM

FOR:
WASATCH COUNTY
25 NORTH MAIN
HEBER, UT 84032
CONTACT:
DUSTIN GRABAU
PHONE: 435-657-3180

WASATCH COUNTY COURTHOUSE
ALTA-NSPS LAND TITLE SURVEY
1361 US-40
HEBER CITY, UTAH

PROFESSIONAL LAND SURVEYOR
2/9/24
No. 286882
PATRICK M. HARRIS
STATE OF UTAH

ALTA-NSPS LAND TITLE SURVEY

PROJECT NUMBER 12704	PRINT DATE 2/9/24
DRAWN BY B. BAGGETT	CHECKED BY P. HARRIS
PROJECT MANAGER P. HARRIS	

1 OF 2

CALL BLUESTAKES @ 811 AT LEAST 48 HOURS PRIOR TO THE COMMENCEMENT OF ANY CONSTRUCTION.

BENCHMARK

NORTH QUARTER CORNER OF SECTION 8, TOWNSHIP 4 SOUTH, RANGE 5 EAST SALT LAKE BASE AND MERIDIAN (FOUND BRASS CAP)

ELEV = 5664.36'

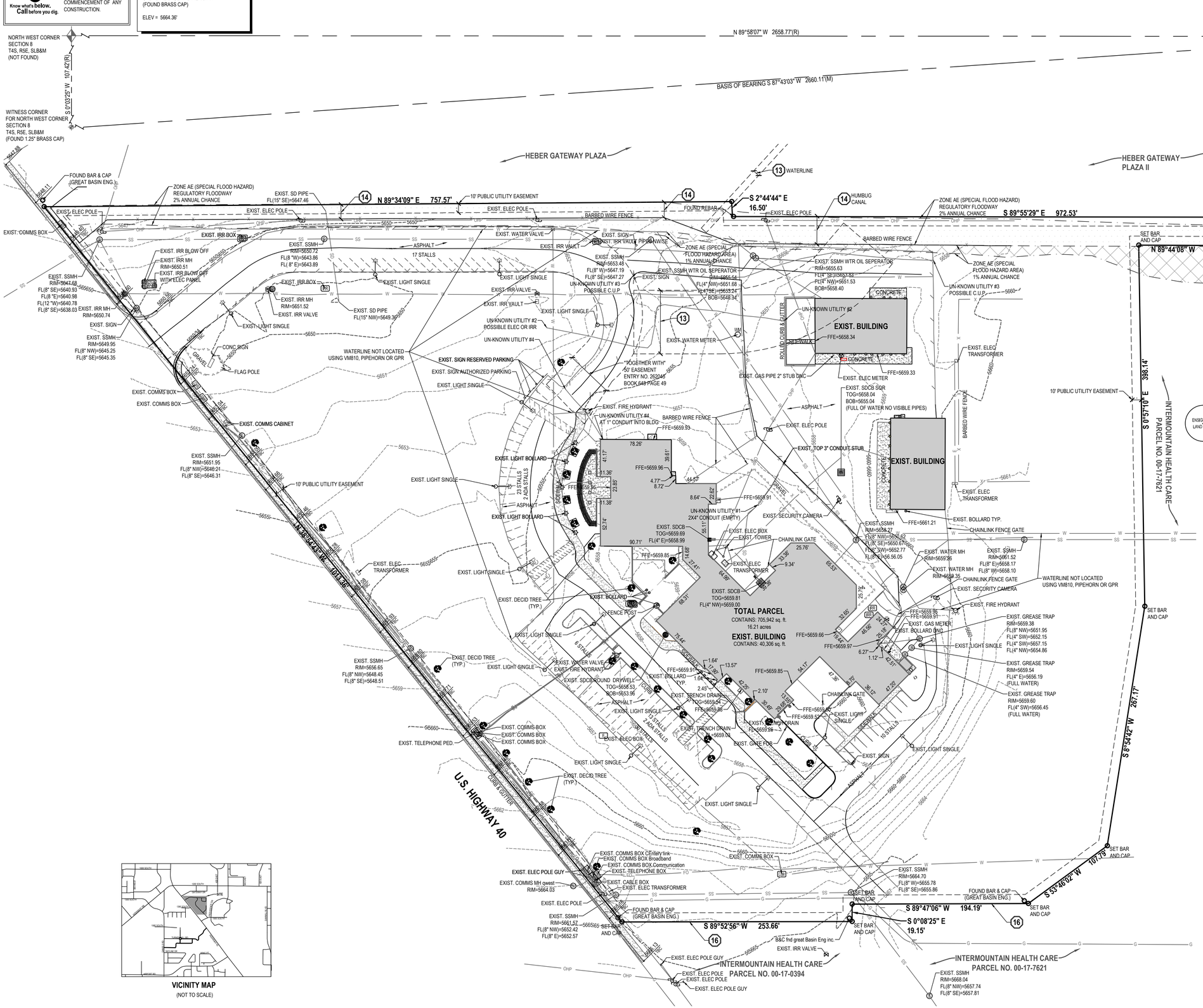
NORTH WEST CORNER SECTION 8 T4S, R5E, SLB&M (NOT FOUND)
WITNESS CORNER FOR NORTH WEST CORNER SECTION 8 T4S, R5E, SLB&M (FOUND 1.25" BRASS CAP)
NORTH QUARTER CORNER SECTION 8 T4S, R5E, SLB&M (FOUND 4" BRASS CAP)
N 89°58'07" W 2658.77'(R)
BASIS OF BEARING S 87°43'03" W 2660.11'(M)
S 0°03'25" W 107.42'(R)
S 1°12'51" E 467.61'
HEBER GATEWAY PLAZA
HEBER GATEWAY PLAZA II
N 89°34'09" E 757.57'
S 2°44'44" E 16.50'
S 89°55'29" E 972.53'
S 81°21'53" E 178.71'
N 89°44'08" W 523.33'
N 81°19'05" W 180.27'
S 0°01'12" E 33.09'
S 0°57'10" E 398.14'
S 8°54'42" W 267.17'
S 53°46'02" W 107.73'
S 89°47'06" W 194.19'
S 0°08'25" E 19.15'
S 89°52'56" W 253.66'
N 35°34'44" W 103.38'
POINT OF BEGINNING AS-SURVEYED
SET BAR AND CAP
FOUND BAR & CAP (GREAT BASIN ENG.)
FOUND REBAR
10' PUBLIC UTILITY EASEMENT
ZONE AE (SPECIAL FLOOD HAZARD) REGULATORY FLOODWAY 2% ANNUAL CHANCE
ZONE AE (SPECIAL FLOOD HAZARD AREA) 1% ANNUAL CHANCE
EXIST. BUILDING
FFE=5658.34
FFE=5659.33
TOTAL PARCEL
CONTAINS: 705,942 sq. ft.
16.21 acres
EXIST. BUILDING
CONTAINS: 40,306 sq. ft.
INTERMOUNTAIN HEALTH CARE PARCEL NO. 00-17-7621
INTERMOUNTAIN HEALTH CARE PARCEL NO. 00-17-0394
U.S. HIGHWAY 40
WATERLINE NOT LOCATED USING VM810, PIPEHORN OR GPR
EXIST. SIGN RESERVED PARKING
EXIST. SIGN AUTHORIZED PARKING
EXIST. LIGHT SINGLE
EXIST. LIGHT BOLLARD
EXIST. DECID TREE (TYP.)
EXIST. ELEC TRANSFORMER
EXIST. COMMS BOX
EXIST. COMMS CABINET
EXIST. TELEPHONE PED.
EXIST. ELEC POLE GUY
EXIST. ELEC POLE
EXIST. SSMH RIM=5656.65 FL(8" NW)=5648.45 FL(8" SE)=5648.51
EXIST. SSMH RIM=5651.95 FL(8" NW)=5646.21 FL(8" SE)=5646.31
EXIST. SSMH RIM=5649.95 FL(8" NW)=5645.25 FL(8" SE)=5645.35
EXIST. SSMH RIM=5647.68 FL(8" SE)=5640.93 FL(8 "E)=5640.98 FL(12 "W)=5640.78 FL(8" SE)=5638.03
EXIST. SSMH RIM=5664.70 FL(8" NW)=5655.78 FL(8" SE)=5655.86
EXIST. SSMH RIM=5668.04 FL(8" NW)=5657.74 FL(8" SE)=5657.81
EXIST. SSMH RIM=5661.52 FL(8" E)=5658.17 FL(8" W)=5658.10
EXIST. SSMH RIM=5656.27 FL(8" NW)=5650.62 FL(8" SE)=5650.67 FL(8" SW)=5652.77 FL(8" E)=5656.05
EXIST. SSMH RIM=5653.48 FL(8" W)=5647.19 FL(8" SE)=5647.27
EXIST. SSMH WTR OIL SEPERATOR RIM=5655.63 FL(4" SE)=5653.84 FL(4" NW)=5651.53 BOB=5658.40
EXIST. SSMH WTR OIL SEPERATOR RIM=5655.54 FL(4" NW)=5651.68 FL(4" SE)=5653.24 BOB=5649.34
EXIST. SDCB SQR TOG=5658.04 BOB=5655.04 (FULL OF WATER NO VISIBLE PIPES)
EXIST. SDCB TOG=5659.69 FL(4" E)=5658.99
EXIST. SDCB TOG=5659.81 FL(4" NW)=5659.00
EXIST. SDCB ROUND DRYWELL TOG=5656.53 BOB=5653.96
EXIST. WATER MH RIM=5659.36
EXIST. WATER MH RIM=5659.35
EXIST. GREASE TRAP RIM=5659.38 FL(8" NW)=5651.95 FL(4" SW)=5652.15 FL(4" SW)=5657.15 FL(4" NW)=5654.86
EXIST. GREASE TRAP RIM=5659.54 FL(4" E)=5656.19 (FULL WATER)
EXIST. GREASE TRAP RIM=5659.60 FL(4" SW)=5656.45 (FULL WATER)
EXIST. TRENCH DRAIN TOG=5659.54
EXIST. TRENCH DRAIN FL=5659.26
EXIST. TRENCH DRAIN FL=5659.04
EXIST. GATE FOB
EXIST. SECURITY CAMERA
EXIST. FIRE HYDRANT
EXIST. GAS METER
EXIST. BOLLARD TYP.
EXIST. BOLLARD
EXIST. DECID TREE (TYP.)
EXIST. FENCE POST
EXIST. WATER VALVE
EXIST. IRR VALVE
EXIST. IRR VAULT
EXIST. IRR BLOW OFF
EXIST. IRR MH RIM=5650.51
EXIST. IRR BLOW OFF WITH ELEC PANEL
EXIST. IRR BOX
EXIST. IRR MH RIM=5651.52
EXIST. IRR MH RIM=5650.74
EXIST. SD PIPE FL(15" SE)=5647.46
EXIST. SD PIPE FL(15" NW)=5649.36
EXIST. SSMH RIM=5650.72 FL(8 "W)=5643.86 FL(8" E)=5643.89
EXIST. ELEC POLE
EXIST. COMMS BOX
EXIST. SIGN
EXIST. CONC SIGN
FLAG POLE
EXIST. WATER METER
EXIST. ELEC METER
EXIST. GAS PIPE 2" STUB DNC
EXIST. FIRE HYDRANT
EXIST. TOP 3" CONDUIT STUB
EXIST. ELEC BOX
EXIST. TOWER
CHAINLINK GATE
CHAINLINK FENCE GATE
BARBED WIRE FENCE
ASPHALT
CONCRETE
SIDEWALK
ROLLED CURB & GUTTER
CURB & GUTTER
GRAVEL
UN-KNOWN UTILITY #1 2X4" CONDUIT (EMPTY)
UN-KNOWN UTILITY #2 POSSIBLE ELEC OR IRR
UN-KNOWN UTILITY #3 POSSIBLE C.U.P.
UN-KNOWN UTILITY #4
UN-KNOWN UTILITY #4 AT 1" CONDUIT INTO BLDG
"TOGETHER WITH" 50' EASEMENT ENTRY NO. 262045 BOOK 648 PAGE 49
B&C fnd great Basin Eng inc.
EXIST. IRR VALVE
WATERLINE
HUMBUG CANAL
EXIST. ELEC TRANSFORMER
EXIST. BOLLARD TYP.
EXIST. COMMS BOX CEnfiery link
EXIST. COMMS BOX Broadband
EXIST. COMMS BOX Communication
EXIST. TELEPHONE BOX
EXIST. CABLE BOX
EXIST. COMMS MH qwest RIM=5664.03
EXIST. SSMH RIM=5661.52 FL(8" NW)=5652.42 FL(8" E)=5652.57
FOUND BAR & CAP (GREAT BASIN ENG.)
SET BAR AND CAP
10' PUBLIC UTILITY EASEMENT
INTERMOUNTAIN HEALTH CARE PARCEL NO. 00-17-7621
ZONE AE (SPECIAL FLOOD HAZARD) REGULATORY FLOODWAY 2% ANNUAL CHANCE
ZONE AE (SPECIAL FLOOD HAZARD AREA) 1% ANNUAL CHANCE
UN-KNOWN UTILITY #3 POSSIBLE C.U.P.
WATERLINE NOT LOCATED USING VM810, PIPEHORN OR GPR
EXIST. ELEC TRANSFORMER
EXIST. BOLLARD TYP.
EXIST. SECURITY CAMERA
EXIST. FIRE HYDRANT
EXIST. GAS METER
EXIST. BOLLARD DNC
EXIST. LIGHT SINGLE
EXIST. SIGN
EXIST. DECID TREE (TYP.)
EXIST. COMMS BOX
EXIST. TELEPHONE PED.
EXIST. ELEC POLE GUY
EXIST. ELEC POLE
EXIST. SSMH RIM=5656.65 FL(8" NW)=5648.45 FL(8" SE)=5648.51
EXIST. SSMH RIM=5651.95 FL(8" NW)=5646.21 FL(8" SE)=5646.31
EXIST. SSMH RIM=5661.52 FL(8" NW)=5652.42 FL(8" E)=5652.57
EXIST. COMMS MH qwest RIM=5664.03
EXIST. SSMH RIM=5664.70 FL(8" W)=5655.78 FL(8" SE)=5655.86
EXIST. SSMH RIM=5668.04 FL(8" NW)=5657.74 FL(8" SE)=5657.81
EXIST. SSMH RIM=5647.68 FL(8" SE)=5640.93 FL(8 "E)=5640.98 FL(12 "W)=5640.78 FL(8" SE)=5638.03
EXIST. SSMH RIM=5649.95 FL(8" NW)=5645.25 FL(8" SE)=5645.35
EXIST. SSMH RIM=5653.48 FL(8" W)=5647.19 FL(8" SE)=5647.27
EXIST. SSMH RIM=5655.63 FL(4" SE)=5653.84 FL(4" NW)=5651.53 BOB=5658.40
EXIST. SSMH RIM=5655.54 FL(4" NW)=5651.68 FL(4" SE)=5653.24 BOB=5649.34
EXIST. SSMH RIM=5656.27 FL(8" NW)=5650.62 FL(8" SE)=5650.67 FL(8" SW)=5652.77 FL(8" E)=5656.05
EXIST. SSMH RIM=5661.52 FL(8" E)=5658.17 FL(8" W)=5658.10
EXIST. SDCB SQR TOG=5658.04 BOB=5655.04 (FULL OF WATER NO VISIBLE PIPES)
EXIST. SDCB TOG=5659.69 FL(4" E)=5658.99
EXIST. SDCB TOG=5659.81 FL(4" NW)=5659.00
EXIST. SDCB ROUND DRYWELL TOG=5656.53 BOB=5653.96
EXIST. WATER MH RIM=5659.36
EXIST. WATER MH RIM=5659.35
EXIST. GREASE TRAP RIM=5659.38 FL(8" NW)=5651.95 FL(4" SW)=5652.15 FL(4" SW)=5657.15 FL(4" NW)=5654.86
EXIST. GREASE TRAP RIM=5659.54 FL(4" E)=5656.19 (FULL WATER)
EXIST. GREASE TRAP RIM=5659.60 FL(4" SW)=5656.45 (FULL WATER)
EXIST. TRENCH DRAIN TOG=5659.54
EXIST. TRENCH DRAIN FL=5659.26
EXIST. TRENCH DRAIN FL=5659.04
EXIST. GATE FOB

CALL BLUESTAKES @ 811 AT LEAST 48 HOURS PRIOR TO THE COMMENCEMENT OF ANY CONSTRUCTION.

811 Know what's **below.** **Call** before you dig.

GENERAL NOTES

1. ALL CONSTRUCTION MUST STRICTLY FOLLOW THE STANDARDS AND SPECIFICATIONS SET FORTH BY: THE DESIGN ENGINEER, LOCAL AGENCY JURISDICTION, APWA (CURRENT EDITION), AND THE MANUAL ON UNIFORM TRAFFIC CONTROL DEVICES (M.U.T.C.D.). THE ORDER LISTED ABOVE IS ARRANGED BY SENIORITY. THE LATEST EDITION OF ALL STANDARDS AND SPECIFICATIONS MUST BE ADHERED TO. IF A CONSTRUCTION PRACTICE IS NOT SPECIFIED BY ANY OF THE LISTED SOURCES, CONTRACTOR MUST CONTACT DESIGN ENGINEER FOR DIRECTION.

2. CONTRACTOR TO STRICTLY FOLLOW THE MOST CURRENT COPY OF THE SOILS REPORT FOR THIS PROJECT. ALL GRADING INCLUDING BUT NOT LIMITED TO CUT, FILL, COMPACTION, ASPHALT SECTION, SUBBASE, TRENCH EXCAVATION/BACKFILL, SITE GRUBBING, AND FOOTINGS MUST BE COORDINATED DIRECTLY WITH SOILS REPORT.

3. CONTRACTOR MUST VERIFY ALL EXISTING CONDITIONS BEFORE BIDDING, AND BRING UP ANY QUESTIONS BEFORE SUBMITTING BID.

4. CONTRACTOR SHALL PROVIDE A CONSTRUCTION SCHEDULE IN ACCORDANCE WITH THE CITY, STATE, OR COUNTY REGULATIONS FOR WORKING IN THE PUBLIC WAY.

5. CONTRACTOR SHALL BE RESPONSIBLE FOR DUST CONTROL ACCORDING TO GOVERNING AGENCY STANDARDS. WET DOWN DRY MATERIALS AND RUBBISH TO PREVENT BLOWING.

6. CONTRACTOR SHALL BE RESPONSIBLE FOR ANY DAMAGE TO ADJACENT SURFACE IMPROVEMENTS.

7. CONTRACTOR SHALL BE RESPONSIBLE FOR CORRECTING ANY SETTLEMENT OF OR DAMAGE TO EXISTING UTILITIES.

8. THE CONTRACTOR IS RESPONSIBLE TO FURNISH ALL MATERIALS TO COMPLETE THE PROJECT.

9. ALL EXPOSED SURFACES WILL HAVE A TEXTURED FINISH, RUBBED, OR BROOMED. ANY "PLASTERING" OF NEW CONCRETE WILL BE DONE WHILE IT IS STILL "GREEN".

10. PRIOR TO STARTING CONSTRUCTION, THE CONTRACTOR SHALL BE RESPONSIBLE FOR VERIFYING THAT ALL REQUIRED PERMITS AND APPROVALS HAVE BEEN OBTAINED. NO CONSTRUCTION OR FABRICATION SHALL BEGIN UNTIL THE CONTRACTOR HAS RECEIVED AND THOROUGHLY REVIEWED ALL PLANS AND OTHER DOCUMENTS APPROVED BY ALL OF THE PERMITTING AUTHORITIES.

11. THE LOCATIONS OF UNDERGROUND FACILITIES SHOWN ON THESE PLANS ARE BASED ON FIELD SURVEYS AND LOCAL UTILITY COMPANY RECORDS. IT SHALL BE THE CONTRACTOR'S FULL RESPONSIBILITY TO CONTACT THE VARIOUS UTILITY COMPANIES TO LOCATE THEIR FACILITIES PRIOR TO PROCEEDING WITH CONSTRUCTION. NO ADDITIONAL COMPENSATION SHALL BE PAID TO THE CONTRACTOR FOR DAMAGE AND REPAIR TO THESE FACILITIES CAUSED BY HIS WORK FORCE. CONTRACTOR SHALL START INSTALLATION AT LOW POINT OF ALL NEW GRAVITY UTILITY LINES.

12. ALL DIMENSIONS, GRADES, AND UTILITY DESIGN SHOWN ON THE PLANS SHALL BE VERIFIED BY THE CONTRACTOR PRIOR TO CONSTRUCTION. CONTRACTOR SHALL NOTIFY THE ENGINEER IF ANY DISCREPANCIES EXIST, PRIOR TO PROCEEDING WITH CONSTRUCTION FOR NECESSARY PLAN OR GRADE CHANGES. NO EXTRA COMPENSATION SHALL BE PAID TO THE CONTRACTOR FOR WORK HAVING TO BE REDONE DUE TO THE DIMENSIONS OR GRADES SHOWN INCORRECTLY ON THESE PLANS, IF SUCH NOTIFICATION HAS NOT BEEN GIVEN.

13. NO CHANGE IN DESIGN LOCATION OR GRADE WILL BE MADE BY THE CONTRACTOR WITHOUT THE WRITTEN APPROVAL OF THE PROJECT ENGINEER.

14. NATURAL VEGETATION AND SOIL COVER SHALL NOT BE DISTURBED PRIOR TO ACTUAL CONSTRUCTION OF A REQUIRED FACILITY OR IMPROVEMENT. MASS CLEARING OF THE SITE IN ANTICIPATION OF CONSTRUCTION SHALL BE AVOIDED.

15. CONTRACTOR SHALL BE RESPONSIBLE FOR FURNISHING, MAINTAINING, OR RESTORING ALL MONUMENTS AND MONUMENT REFERENCE MARKS WITHIN THE PROJECT SITE. CONTACT THE CITY OR COUNTY SURVEYOR FOR MONUMENT LOCATIONS AND CONSTRUCTION DETAILS.

16. EXISTING UTILITY INFORMATION SHOWN IS FOR INFORMATIONAL PURPOSES ONLY. IT IS DERIVED FROM ON-SITE SURVEY AND/OR UTILITY MAPPING PROVIDED TO THE ENGINEER, AND THEREFORE UTILITIES MAY NOT BE LOCATED CORRECTLY, EITHER HORIZONTALLY OR VERTICALLY, AND MAY NOT BE ALL INCLUSIVE. CONTRACTOR IS REQUIRED TO FOLLOW THE PROCEDURE OUTLINED BELOW:
    - 16.1. CONTRACTOR IS REQUIRED TO LOCATE AND POTHOLE ALL EXISTING UTILITY LINES (BOTH HORIZONTALLY AND VERTICALLY) THAT AFFECT THE PROJECT CONSTRUCTION, EITHER ON-SITE OR OFF-SITE, AND DETERMINE IF THERE ARE ANY CONFLICTS WITH THE DESIGN OF THE SITE AS SHOWN ON THE APPROVED PLANS PRIOR TO ANY CONSTRUCTION. IF IT IS DETERMINED THAT CONFLICTS EXIST BETWEEN EXISTING UTILITIES AND DESIGN UTILITIES (OR ANOTHER ASPECT OF PROPOSED CONSTRUCTION) THE ENGINEER MUST BE NOTIFIED IMMEDIATELY TO CORRECT THE CONFLICTS BEFORE ANY WORK CAN BEGIN. IF THE CONTRACTOR FAILS TO FOLLOW THIS ABSOLUTE REQUIREMENT AND CONFLICTS ARISE DURING CONSTRUCTION THE CONTRACTOR WILL BEAR THE SOLE RESPONSIBILITY TO FIX THE CONFLICTS.
    - 16.2. CONTRACTOR IS REQUIRED TO VERIFY THAT PROPER COVER AND PROTECTION OF EXISTING UTILITY LINES IS MAINTAINED OR ATTAINED WITHIN THE DESIGN ONCE VERIFICATION OF THE EXISTING UTILITIES IS COMPLETED AS OUTLINED IN 16.1 ABOVE.
    - 16.3. IN ADDITION TO 16.1 AND 16.2 ABOVE THE CONTRACTOR WILL VERIFY DEPTHS OF UTILITIES IN THE FIELD BY "POTHOLING" A MINIMUM OF 300 FEET AHEAD OF PROPOSED PIPELINE CONSTRUCTION TO AVOID POTENTIAL CONFLICTS WITH DESIGNED PIPELINE ALIGNMENT AND GRADE AND EXISTING UTILITIES.
    - 16.4. IF A CONFLICT ARISES BETWEEN EXISTING UTILITIES AND DESIGN UTILITIES (OR ANOTHER ASPECT OF PROPOSED CONSTRUCTION) AS DETERMINED UNDER 16.1, 16.2 OR 16.3 THE CONTRACTOR WILL NOTIFY THE ENGINEER IMMEDIATELY TO RESOLVE THE CONFLICT.
    - 16.5. IF A CONFLICT ARISES BETWEEN EXISTING UTILITIES AND DESIGN UTILITIES (OR ANOTHER ASPECT OF PROPOSED CONSTRUCTION) RESULTING FROM THE CONTRACTOR'S NEGLIGENCE TO IDENTIFY AND/OR "POTHOLE" EXISTING UTILITIES AS REQUIRED IN 16.1, 16.2 AND 16.3 ABOVE, THE CONTRACTOR WILL BE REQUIRED TO RESOLVE THE CONFLICT WITHOUT ADDITIONAL COST OR CLAIM TO THE OWNER OR ENGINEER.

17. ANY AREA OUTSIDE THE LIMIT OF WORK THAT IS DISTURBED SHALL BE RESTORED TO ITS ORIGINAL CONDITION AT NO COST TO OWNER.

18. CONSULT ALL OF THE DRAWINGS AND SPECIFICATIONS FOR COORDINATION REQUIREMENTS BEFORE COMMENCING CONSTRUCTION.

19. AT ALL LOCATIONS WHERE EXISTING PAVEMENT ABUTS NEW CONSTRUCTION, THE EDGE OF THE EXISTING PAVEMENT SHALL BE SAWCUT TO A CLEAN, SMOOTH EDGE.

20. ALL CONSTRUCTION AND MATERIALS SHALL BE IN ACCORDANCE WITH THE MOST RECENT, ADOPTED EDITION OF ADA ACCESSIBILITY GUIDELINES.

21. CONTRACTOR SHALL, AT THE TIME OF BIDDING AND THROUGHOUT THE PERIOD OF THE CONTRACT, BE LICENSED IN THE STATE OF UTAH AND SHALL BE BONDABLE FOR AN AMOUNT REQUIRED BY THE OWNER.

22. CONTRACTOR SHALL BE RESPONSIBLE TO PROVIDE ALL WATER, POWER, SANITARY FACILITIES AND TELEPHONE SERVICES AS REQUIRED FOR THE CONTRACTOR'S USE DURING CONSTRUCTION.

23. CONTRACTOR SHALL BE RESPONSIBLE FOR ADEQUATELY SCHEDULING INSPECTION AND TESTING OF ALL FACILITIES CONSTRUCTED UNDER THIS CONTRACT. ALL TESTING SHALL CONFORM TO THE REGULATORY AGENCY'S STANDARD SPECIFICATIONS. ALL RE-TESTING AND/OR RE-INSPECTION SHALL BE PAID FOR BY THE CONTRACTOR.

24. IF EXISTING IMPROVEMENTS NEED TO BE DISTURBED AND/OR REMOVED FOR THE PROPER PLACEMENT OF IMPROVEMENTS TO BE CONSTRUCTED BY THESE PLANS, THE CONTRACTOR SHALL BE RESPONSIBLE FOR PROTECTING EXISTING IMPROVEMENTS FROM DAMAGE. COST OF REPLACING OR REPAIRING EXISTING IMPROVEMENTS SHALL BE INCLUDED IN THE UNIT PRICE BID FOR ITEMS REQUIRING REMOVAL AND/OR REPLACEMENT. THERE WILL BE NO EXTRA COST DUE TO THE CONTRACTOR FOR REPLACING OR REPAIRING EXISTING IMPROVEMENTS.

25. WHENEVER EXISTING FACILITIES ARE REMOVED, DAMAGED, BROKEN, OR CUT IN THE INSTALLATION OF THE WORK COVERED BY THESE PLANS OR SPECIFICATIONS, SAID FACILITIES SHALL BE REPLACED AT THE CONTRACTOR'S EXPENSE WITH MATERIALS EQUAL TO OR BETTER THAN THE MATERIALS USED IN THE ORIGINAL EXISTING FACILITIES. THE FINISHED PRODUCT SHALL BE SUBJECT TO THE APPROVAL OF THE OWNER, THE ENGINEER, AND THE RESPECTIVE REGULATORY AGENCY.

26. CONTRACTOR SHALL MAINTAIN A NEATLY MARKED SET OF FULL-SIZE RECORD DRAWINGS SHOWING THE FINAL LOCATION AND LAYOUT OF ALL STRUCTURES AND OTHER FACILITIES. RECORD DRAWINGS SHALL REFLECT CHANGE ORDERS, ACCOMMODATIONS, AND ADJUSTMENTS TO ALL IMPROVEMENTS CONSTRUCTED. WHERE NECESSARY, SUPPLEMENTAL DRAWINGS SHALL BE PREPARED AND SUBMITTED BY THE CONTRACTOR. PRIOR TO ACCEPTANCE OF THE PROJECT, THE CONTRACTOR SHALL DELIVER TO THE ENGINEER ONE SET OF NEATLY MARKED RECORD DRAWINGS SHOWING THE INFORMATION REQUIRED ABOVE. RECORD DRAWINGS SHALL BE REVIEWED AND THE COMPLETE RECORD DRAWING SET SHALL BE CURRENT WITH ALL CHANGES AND DEVIATIONS REDLINED AS A PRECONDITION TO THE FINAL PROGRESS PAYMENT APPROVAL AND/OR FINAL ACCEPTANCE.

27. WHERE THE PLANS OR SPECIFICATIONS DESCRIBE PORTIONS OF THE WORK IN GENERAL TERMS BUT NOT IN COMPLETE DETAIL, IT IS UNDERSTOOD THAT ONLY THE BEST GENERAL PRACTICE IS TO PREVAIL AND THAT ONLY MATERIALS AND WORKMANSHIP OF THE FIRST QUALITY ARE TO BE USED.

28. ALL EXISTING GATES AND FENCES TO REMAIN UNLESS OTHERWISE NOTED ON PLANS. PROTECT ALL GATES AND FENCES FROM DAMAGE.

29. ALL EXISTING TREES ARE TO REMAIN UNLESS OTHERWISE NOTED ON PLANS. PROTECT ALL TREES FROM DAMAGE.

30. ASPHALT MIX DESIGN MUST BE SUBMITTED AND APPROVED BY THE GOVERNING AGENCY PRIOR TO THE PLACEMENT.

31. CONTRACTORS ARE RESPONSIBLE FOR ALL OSHA REQUIREMENTS ON THE PROJECT SITE.

32. A UPDES (UTAH POLLUTANT DISCHARGE ELIMINATION SYSTEM) PERMIT IS REQUIRED FOR ALL CONSTRUCTION ACTIVITIES 1 ACRE OR MORE AS WELL AS A STORM WATER POLLUTION PREVENTION PLAN.

TRAFFIC CONTROL AND SAFETY NOTES

1. TRAFFIC CONTROL AND STRIPING TO CONFORM TO THE CURRENT MANUAL OF UNIFORM TRAFFIC CONTROL DEVICES (M.U.T.C.D.).

2. BARRICADING AND DETOURING SHALL BE IN CONFORMANCE WITH THE REQUIREMENTS OF THE CURRENT M.U.T.C.D.

3. NO STREET SHALL BE CLOSED TO TRAFFIC WITHOUT WRITTEN PERMISSION FROM THE APPROPRIATE AGENCY, EXCEPT WHEN DIRECTED BY LAW ENFORCEMENT OR FIRE OFFICIALS.

4. THE CONTRACTOR SHALL MAKE EVERY EFFORT TO PROVIDE FOR SMOOTH TRAFFIC FLOW AND SAFETY. ACCESS SHALL BE MAINTAINED FOR ALL PROPERTIES ADJACENT TO THE WORK.

5. DETOURING OPERATIONS FOR A PERIOD OF SIX CONSECUTIVE CALENDAR DAYS, OR MORE, REQUIRE THE INSTALLATION OF TEMPORARY STREET STRIPING AND REMOVAL OF INTERFERING STRIPING BY SANDBLASTING. THE DETOURING STRIPING PLAN OR CONSTRUCTION TRAFFIC CONTROL PLAN MUST BE SUBMITTED TO THE GOVERNING AGENCY FOR REVIEW AND APPROVAL.

6. ALL TRAFFIC CONTROL DEVICES SHALL BE RESTORED TO THEIR ORIGINAL CONDITION AT THE END OF THE WORK TO THE SATISFACTION OF THE GOVERNING AGENCY.

7. TRAFFIC CONTROL DEVICES (TCDs) SHALL REMAIN VISIBLE AND OPERATIONAL AT ALL TIMES.

8. ALL PERMANENT TRAFFIC CONTROL DEVICES CALLED FOR HEREON SHALL BE IN PLACE AND IN FINAL POSITION PRIOR TO ALLOWING ANY PUBLIC TRAFFIC ONTO THE PORTIONS OF THE ROAD(S) BEING IMPROVED HEREUNDER, REGARDLESS OF THE STATUS OF COMPLETION OF PAVING OR OTHER OFF-SITE IMPROVEMENTS CALLED FOR BY THESE PLANS.

9. THE CONTRACTOR SHALL PROVIDE BARRICADES, SIGNS, FLASHERS, OTHER EQUIPMENT AND FLAG PERSONS NECESSARY TO INSURE THE SAFETY OF WORKERS AND VISITORS.

10. THE CONTRACTOR SHALL BE RESPONSIBLE FOR NOTIFYING UTAH TRANSIT AUTHORITY (UTA) IF THE CONSTRUCTION INTERRUPTS OR RELOCATES A BUS STOP OR HAS AN ADVERSE EFFECT ON BUS SERVICE ON THAT STREET TO ARRANGE FOR TEMPORARY RELOCATION OF STOP.

UTILITY NOTES

1. ALL CONSTRUCTION AND MATERIALS SHALL BE IN ACCORDANCE WITH THESE CONTRACT DOCUMENTS, CITY AND STATE REQUIREMENTS AND THE MOST RECENT EDITIONS OF THE FOLLOWING: THE INTERNATIONAL PLUMBING CODE, UTAH DRINKING WATER REGULATIONS, APWA MANUAL OF STANDARD PLANS AND SPECIFICATIONS. THE CONTRACTOR IS REQUIRED TO ADHERE TO ALL OF THE ABOVE-MENTIONED DOCUMENTS UNLESS OTHERWISE NOTED AND APPROVED BY THE ENGINEER.

2. CONTRACTOR SHALL COORDINATE LOCATION OF NEW "DRY UTILITIES" WITH THE APPROPRIATE UTILITY COMPANY, INCLUDING BUT NOT LIMITED TO: TELEPHONE & INTERNET SERVICE, GAS SERVICE, CABLE, AND POWER.

3. EXISTING UTILITIES HAVE BEEN SHOWN ON THE PLANS BASED ON ON-SITE SURVEY. PRIOR TO COMMENCING ANY WORK, IT SHALL BE THE CONTRACTOR'S RESPONSIBILITY TO HAVE EACH UTILITY COMPANY LOCATE, IN THE FIELD, THEIR MAIN AND SERVICE LINES. THE CONTRACTOR SHALL NOTIFY BLUE STAKES AT 1-800-662-4111 48 HOURS IN ADVANCE OF PERFORMING ANY EXCAVATION WORK. THE CONTRACTOR SHALL RECORD THE BLUE STAKES ORDER NUMBER AND FURNISH ORDER NUMBER TO OWNER AND ENGINEER PRIOR TO ANY EXCAVATION. IT WILL BE THE CONTRACTOR'S SOLE RESPONSIBILITY TO DIRECTLY CONTACT ANY OTHER UTILITY COMPANIES THAT ARE NOT MEMBERS OF BLUE STAKES. IT SHALL BE THE CONTRACTOR'S SOLE RESPONSIBILITY TO PROTECT ALL EXISTING UTILITIES SO THAT NO DAMAGE RESULTS TO THEM DURING THE PERFORMANCE OF THIS CONTRACT. ANY REPAIRS NECESSARY TO DAMAGED UTILITIES SHALL BE PAID FOR BY THE CONTRACTOR. THE CONTRACTOR SHALL BE REQUIRED TO COOPERATE WITH OTHER CONTRACTORS AND UTILITY COMPANIES INSTALLING NEW STRUCTURES, UTILITIES AND SERVICE TO THE PROJECT.

4. CARE SHOULD BE TAKEN IN ALL EXCAVATIONS DUE TO POSSIBLE EXISTENCE OF UNRECORDED UTILITY LINES. EXCAVATION REQUIRED WITHIN PROXIMITY OF EXISTING UTILITY LINES SHALL BE DONE BY HAND. CONTRACTOR SHALL REPAIR ANY DAMAGE TO EXISTING UTILITY LINES OR STRUCTURES INCURRED DURING CONSTRUCTION OPERATIONS AT CONTRACTOR'S EXPENSE.

5. TRENCH BACKFILL MATERIAL AND COMPACTION TESTS ARE TO BE TAKEN PER APWA STANDARD SPECIFICATIONS (CURRENT EDITION), SECTION 33 05 20 - BACKFILLING TRENCHES, OR AS REQUIRED BY THE GEOTECHNICAL REPORT IF NATIVE MATERIALS ARE USED. NO NATIVE MATERIALS ARE ALLOWED IN THE PIPE ZONE. THE MAXIMUM LIFT FOR BACKFILLING EXCAVATIONS IS DETERMINED BY THE GEOTECHNICAL RECOMMENDATIONS.

6. THE CONTRACTOR IS SOLELY RESPONSIBLE FOR CONFORMING TO LOCAL AND FEDERAL CODES GOVERNING SHORING AND BRACING OF EXCAVATIONS AND TRENCHES AND FOR THE PROTECTION OF WORKERS.

7. THE CONTRACTOR IS REQUIRED TO KEEP ALL CONSTRUCTION ACTIVITIES WITHIN THE APPROVED PROJECT LIMITS. THIS INCLUDES, BUT IS NOT LIMITED TO VEHICLE AND EQUIPMENT STAGING, MATERIAL STORAGE AND LIMITS OF TRENCH EXCAVATION. IT IS THE CONTRACTOR'S RESPONSIBILITY TO OBTAIN PERMISSION AND/OR EASEMENTS FROM THE APPROPRIATE GOVERNING ENTITY AND/OR INDIVIDUAL PROPERTY OWNER(S) FOR WORK OR STAGING OUTSIDE OF THE PROJECT LIMITS.

8. THE CONTRACTOR IS RESPONSIBLE FOR REPAIRING ANY DAMAGE, CAUSED BY ANY CONDITION INCLUDING SETTLEMENT, TO EXISTING UTILITIES FROM WORK PERFORMED AT OR NEAR EXISTING UTILITIES. THE CONTRACTOR SHALL TAKE ALL MEASURES NECESSARY TO PROTECT ALL EXISTING PUBLIC AND PRIVATE ROADWAY AND UTILITY FACILITIES. DAMAGE TO EXISTING FACILITIES CAUSED BY THE CONTRACTOR MUST BE REPAIRED BY THE CONTRACTOR AT HIS/HER EXPENSE TO THE SATISFACTION OF THE OWNER OF SAID FACILITIES.

9. ALL WATER LINE AND SEWER LINE INSTALLATION AND TESTING TO BE IN ACCORDANCE WITH LOCAL GOVERNING AGENCY'S STANDARDS AND SPECIFICATIONS.

10. ALL MANHOLES, HYDRANTS, VALVES, CLEANOUT BOXES, CATCH BASINS, METERS, ETC. MUST BE RAISED OR LOWERED TO FINAL GRADE PER HEBER CITY STAND DRAWINGS AND SPECIFICATIONS UNLESS HEBER CITY'S SPECIFICATIONS DO NOT APPLY THEN USE APWA (CURRENT EDITION) STANDARDS AND INSPECTOR REQUIREMENTS. CONCRETE COLLARS MUST BE CONSTRUCTED ON ALL MANHOLES, CLEANOUT BOXES, CATCH BASINS, AND VALVES PER HEBER CITY STAND DRAWINGS AND SPECIFICATIONS UNLESS HEBER CITY'S SPECIFICATIONS DO NOT APPLY THEN USE APWA. ALL MANHOLE, CATCH BASIN, OR CLEANOUT BOX CONNECTIONS MUST BE MADE WITH THE PIPE CUT FLUSH WITH THE INSIDE OF THE BOX AND GROUTED OR SEALED.

11. CONTRACTOR SHALL NOT ALLOW ANY GROUNDWATER OR DEBRIS TO ENTER THE NEW OR EXISTING PIPE DURING CONSTRUCTION.

12. SILT AND DEBRIS ARE TO BE CLEANED OUT OF ALL STORM DRAIN BOXES. CATCH BASINS ARE TO BE MAINTAINED IN A CLEANED CONDITION AS NEEDED UNTIL AFTER THE FINAL BOND RELEASE INSPECTION.

13. CONTRACTOR SHALL CLEAN ASPHALT, TAR OR OTHER ADHESIVES OFF OF ALL MANHOLE LIDS AND INLET GRATES TO ALLOW ACCESS.

14. EACH TRENCH SHALL BE EXCAVATED SO THAT THE PIPE CAN BE LAID TO THE ALIGNMENT AND GRADE AS REQUIRED. THE TRENCH WALL SHALL BE SO BRACED THAT THE WORKMEN MAY WORK SAFELY AND EFFICIENTLY. ALL TRENCHES SHALL BE DRAINED SO THE PIPE LAYING MAY TAKE PLACE IN DEWATERED CONDITIONS.

15. CONTRACTOR SHALL PROVIDE AND MAINTAIN AT ALL TIMES AMPLE MEANS AND DEVICES WITH WHICH TO REMOVE PROMPTLY AND TO PROPERLY DISPOSE OF ALL WATER ENTERING THE TRENCH EXCAVATION.

16. ALL SEWER LINES AND SEWER SERVICES SHALL HAVE A MINIMUM SEPARATION OF 10 FEET, EDGE TO EDGE, FROM THE WATER LINES. IF A 10 FOOT SEPARATION CAN NOT BE MAINTAINED, CONSTRUCT PER GOVERNING AGENCY'S MINIMUM SEPARATION STANDARDS.

17. CONTRACTOR SHALL INSTALL THRUST BLOCKING AT ALL WATERLINE ANGLE POINTS AND TEES.

18. ALL UNDERGROUND UTILITIES SHALL BE IN PLACE PRIOR TO INSTALLATION OF CURB, GUTTER, SIDEWALK AND STREET PAVING.

19. CONTRACTOR SHALL INSTALL MAGNETIC LOCATING TAPE CONTINUOUSLY OVER ALL NONMETALLIC PIPE.

DEMOLITION NOTES

1. EXISTING UTILITY INFORMATION SHOWN IS FOR INFORMATIONAL PURPOSES ONLY. IT IS DERIVED FROM ON-SITE SURVEY AND MAY NOT BE LOCATED CORRECTLY AND IS NOT ALL INCLUSIVE. CONTRACTOR SHALL FIELD LOCATE ALL UTILITIES WITHIN THE PROJECT LIMITS BEFORE BEGINNING DEMOLITION/CONSTRUCTION.

2. THERE MAY BE BURIED UTILITIES WITHIN THE LIMITS OF DISTURBANCE THAT ARE NOT SHOWN ON THE PLANS DUE TO LACK OF MAPPING OR RECORD INFORMATION. CONTRACTOR SHALL NOTIFY THE ENGINEER WHEN UNEXPECTED UTILITIES ARE DISCOVERED.

3. THE CONTRACTOR SHALL BE FULLY RESPONSIBLE FOR LOCATING AND PROTECTING FROM DAMAGE ALL EXISTING UTILITIES AND IMPROVEMENTS WHETHER OR NOT SHOWN ON THESE PLANS. THE FACILITIES AND IMPROVEMENTS ARE BELIEVED TO BE CORRECTLY SHOWN BUT THE CONTRACTOR IS REQUIRED TO SATISFY HIMSELF AS TO THE COMPLETENESS AND ACCURACY OF THE LOCATIONS. ANY CONTRACTOR PERFORMING WORK ON THIS PROJECT SHALL FAMILIARIZE HIMSELF WITH THE SITE AND SHALL BE HELD SOLELY RESPONSIBLE FOR ANY DAMAGE TO EXISTING FACILITIES RESULTING DIRECTLY, OR INDIRECTLY, FROM HIS OPERATIONS, WHETHER OR NOT SAID FACILITIES ARE SHOWN ON THESE PLANS.

GRADING AND DRAINAGE NOTES

1. SITE GRADING SHALL BE PERFORMED IN ACCORDANCE WITH THESE PLANS AND SPECIFICATIONS AND THE RECOMMENDATIONS SET FORTH IN THE GEOTECHNICAL REPORT AND ALL RELATED ADDENDUMS.

2. THE CONTRACTOR SHALL STRIP AND CLEAR THE TOPSOIL, MAJOR ROOTS AND ORGANIC MATERIAL FROM ALL PROPOSED BUILDING AND PAVEMENT AREAS PRIOR TO SITE GRADING. (THE TOPSOIL MAY BE STOCKPILED FOR LATER USE IN LANDSCAPED AREAS.)

3. THE CONTRACTOR SHALL REMOVE ALL ORGANIC MATERIAL AND OTHER DELETERIOUS MATERIALS PRIOR TO PLACING GRADING FILL OR BASE COURSE. THE AREA SHOULD BE PROOF-ROLLED TO IDENTIFY ANY SOFT AREAS. WHERE SOFT AREAS ARE ENCOUNTERED, THE CONTRACTOR SHALL REMOVE THE SOIL AND REPLACE WITH COMPACTED FILL.

4. ALL DEBRIS PILES AND BERMS SHOULD BE REMOVED AND HAULED AWAY FROM SITE OR USED AS GENERAL FILL IN LANDSCAPED AREAS.

5. THE CONTRACTOR SHALL CONSTRUCT THE BUILDING PAD TO THESE DESIGN PLANS AS PART OF THE SITE GRADING CONTRACT, AND STRICTLY ADHERE TO THE SITE PREPARATION AND GRADING REQUIREMENTS OUTLINED IN THE GEOTECHNICAL REPORT.

6. THE CONTRACTOR SHALL GRADE THE PROJECT SITE TO PROVIDE A SMOOTH TRANSITION BETWEEN NEW AND EXISTING ASPHALT, CURB AND GUTTER, AND ADJOINING SITE IMPROVEMENTS.

7. THE CONTRACTOR SHALL BE RESPONSIBLE FOR DAMAGE AND DEBRIS ON ADJACENT STREETS WHEN EQUIPMENT IS TRAVELING THOSE STREETS.

8. THE CONTRACTOR SHALL BE FAMILIAR WITH ALL CONDITIONS AND RECOMMENDATIONS OUTLINED IN THE GEOTECHNICAL REPORT AND TAKE ALL NECESSARY PRECAUTIONS AND RECOMMENDED PROCEDURES TO ASSURE SOUND GRADING PRACTICES.

9. THE CONTRACTOR SHALL TAKE APPROPRIATE GRADING MEASURES TO DIRECT STORM SURFACE RUNOFF TOWARDS CATCH BASINS.

10. THE LOCATIONS OF UNDERGROUND FACILITIES SHOWN ON THESE PLANS ARE BASED ON ON-SITE SURVEY. IT SHALL BE THE CONTRACTORS' FULL RESPONSIBILITY TO CONTACT THE VARIOUS UTILITY COMPANIES TO LOCATE THEIR FACILITIES PRIOR TO PROCEEDING WITH CONSTRUCTION. NO ADDITIONAL COMPENSATION SHALL BE PAID TO THE CONTRACTOR FOR DAMAGE AND REPAIR TO THESE FACILITIES CAUSED BY HIS WORK FORCE.

11. IT SHALL BE THE RESPONSIBILITY OF THE CONTRACTOR TO PERFORM ALL NECESSARY CUTS AND FILLS WITHIN THE LIMITS OF THIS PROJECT AND THE RELATED OFF-SITE WORK, SO AS TO GENERATE THE DESIRED SUBGRADE, FINISH GRADES, AND SLOPES SHOWN.

12. THE CONTRACTOR IS WARNED THAT AN EARTHWORK BALANCE WAS NOT NECESSARILY THE INTENT OF THIS PROJECT. ANY ADDITIONAL MATERIAL REQUIRED OR LEFTOVER MATERIAL FOLLOWING EARTHWORK OPERATIONS BECOMES THE RESPONSIBILITY OF THE CONTRACTOR.

13. THE GRADING CONTRACTOR IS RESPONSIBLE TO COORDINATE WITH THE OWNER TO PROVIDE FOR THE REQUIREMENTS OF THE PROJECT STORM WATER POLLUTION PREVENTION PLAN (SWPPP) AND ASSOCIATED PERMIT. ALL CONTRACTOR ACTIVITIES 1 ACRE OR MORE IN SIZE ARE REQUIRED TO PROVIDE A STORM WATER POLLUTION PREVENTION PLAN.

14. ALL CUT AND FILL SLOPES SHALL BE PROTECTED UNTIL EFFECTIVE EROSION CONTROL HAS BEEN ESTABLISHED.

15. THE USE OF POTABLE WATER WITHOUT A SPECIAL PERMIT FOR BUILDING OR CONSTRUCTION PURPOSES INCLUDING CONSOLIDATION OF BACKFILL OR DUST CONTROL IS PROHIBITED. THE CONTRACTOR SHALL OBTAIN ALL NECESSARY PERMITS FOR CONSTRUCTION WATER FROM GOVERNING AGENCY.

16. THE CONTRACTOR SHALL MAINTAIN THE STREETS, SIDEWALKS, AND ALL OTHER PUBLIC RIGHT-OF-WAYS IN A CLEAN, SAFE AND USABLE CONDITION. ALL SPILLS OF SOIL, ROCK OR CONSTRUCTION DEBRIS SHALL BE PROMPTLY REMOVED FROM THE PUBLICLY-OWNED PROPERTY DURING CONSTRUCTION AND UPON COMPLETION OF THE PROJECT. ALL ADJACENT PROPERTY, PRIVATE OR PUBLIC, SHALL BE MAINTAINED IN A CLEAN, SAFE, AND USABLE CONDITION.

HEBER CITY STANDARD CONSTRUCTION NOTES

1. CONTRACTOR ASSUMES ALL RESPONSIBILITY OF JOB SITE CONDITIONS DURING CONSTRUCTION OF THIS PROJECT, INCLUDING THE SAFETY AND WELL-BEING OF ALL PERSONS AND PROPERTY. THIS RESPONSIBILITY SHALL APPLY CONTINUOUSLY AND NOT BE LIMITED TO NORMAL WORKING HOURS.

2. CONTRACTOR SHALL OBTAIN ALL APPLICABLE PERMITS AND/OR WRITTEN AGREEMENTS NECESSARY OT COMPLETE TEH WORK.

3. CITY OWNED WATER VALVES MAY BE OPERATED ONLY BY CITY STAFF. OPENING, CLOSING OR TAMPERING WITH A CITY WATER VALVE WITHOUT PERMISSION OF THE CITY PUBLIC WORKS DEPARTMENT IS A CLASS B MISDEMEANOR PUNISHABLE BY UP TO SIX MONTHS IN JAIL AND A $1,000 FINE.

4. CONTRACTOR SHALL SCHEDULE A PRE-CONSTRUCTION MEETING WITH THE CITY'S ENGINEERING DEPARTMENT AT LEAST 5 BUSINESS DAYS PRIOR TO THE START OF CONSTRUCTION. CONTRACTOR MUST ATTEND BRING ONE SET OF THE ACKNOWLEDGED CONSTRUCTION DRAWINGS AND A COPY OF THE CURRENT HEBER CITY STANDARD SPECIFICATIONS AND DRAWINGS MANUAL (AVAILABLE AT HEBERUT.GOV).

5. CONTRACTOR SHALL HAVE IN POSSESSION AND ON-SITE AT ALL TIMES ONE COPY OF THE CURRENT ACKNOWLEDGED CONSTRUCTION PLANS STAMPED, SIGNED, AND DATED BY THE ENGINEER OF RECORD, THE APPLICANT, AND THE CITY.

6. DEVELOPER'S ENGINEERS (CIVIL AND GEOTECHNICAL) SHALL PERFORM SUFFICIENT INSPECTIONS AND SURVEYS DURING GRADING AND CONSTRUCTION TO RENDER AN OPINION IN WRITING AS TO ADHERENCE TO THE ACCEPTED PLANS AND COMPLIANCE WITH HEBER CITY STANDARD SPECIFICATIONS AND DRAWINGS MANUAL.

7. ANY WORK DONE IN TEH ABSENCE OF AN INSPECTOR'S APPROVAL SHALL BE SUBJECT TO REJECTION. ALL UNDERGROUND GPS DATA MUST BE COLLECTED BY A CITY REPRESENTATIVE PRIOR TO BACKFILL. INSPECTORS MAY REQUIRE THE CONTRACTOR TO EXPOSE WORK THAT HAS BEEN BACKFILLED WITHOUT PRIOR INSPECTION OR COLLECTION OF GPS DATA. ALL SUCH REQORK SHALL BE COMPLETED AT THE DEVELOPER'S OR OWNER'S EXPENSE.

8. SURVEY MONUMENTS MUST BE INSTALLED IN ACCORDANCE WITH THE CURRENT HEBER CITY AND WASATCH COUNTY SURVEYOR'S OFFICE REQUIREMENTS.

9. ALL DISTURBED PROPERTY SURVEY MARKERS SHALL BE RESET IN THEIR ORIGINAL LOCATIONS UPON COMPLETION OF ALL CONSTRUCTION ACTIVITIES.

10. CONTRACTOR SHALL PROVIDE ALL TRAFFIC CONTROL WHICH MUST CONFORM TO THE CURRENT MUTCD. PROVIDE SITE-SPECIFIC TRAFFIC CONTROL PLANS [PREPARED BY AN AMERICAN TRAFFIC SAFETY SERVICES ASSOCIATION (ATSSA) OR AGC-CERTIFIED INDIVIDUAL] PRIOR TO INSTALLATION OF ANY TRAFFIC CONTROL DEVICES. TRAFFIC CONTROL PLANS MUST BE ACCEPTED BY THE CITY PRIOR TO IMPLEMENTATION AND BEFORE ANY SHOULDER, LANE, OR STREET CLOSURE.

HEBER CITY TRENCHES AND UTILITIES NOTES

1. TRENCHES SHALL BE COMPLETED AND RESTORED PER CITY STANDARD DRAWING UTIL-1.

2. POTHOLE EXISTING UTILITIES IN ACCORDANCE WITH CITY STANDARD DRAWING UTIL-5.

3. CONTRACTOR IS RESPONSIBLE TO LOCATE, AVOID, PROTECT, AND REPAIR ALL UTILITIES ENCOUNTERED DURING CONSTRUCTION, WHETHER OR NOT THEY ARE SHOWN ON THE PLANS. LOCATIONS OF UNDERGROUND UTILITIES SHOWN ON PLANS ARE APPROXIMATE AND REQUIRE FIELD VERIFICATION BY CONTRACTOR.

4. ALL TRENCHES WITHIN PUBLIC RIGHT-OF-WAY MUST BE BACKFILLED OR SECURELY PLATED DURING NON-WORKING HOURS. TRENCHES OUTSIDE THESE AREAS SHALL BE BACK-FILLED OR PROTECTED BY APPROVED TEMPORARY FENCING AND/OR BARRICADES DURING NON-WORKING HOURS. TRENCHES IN THE ROADWAY MUST BE BACKFILLED, COMPACTED, AND PAVED WITHIN 48 HOURS OF ROAD-CUT. PAINT STRIPING SHALL BE REPLACED IN ACCORDANCE TO CITY STANDARDS WITHIN 48-HOURS OF RESTORATION OF PAVEMENT.

HEBER CITY ROADWAY CONSTRUCTION AND RESTORATION NOTES

1. SUBGRADE MUST BE APPROVED PRIOR TO CONSTRUCTION OF UNTREATED BASE COURSE AND PAVEMENT SECTIONS. SUBGRADE APPROVAL REQUIRES THAT A PROOF-ROLL BE COMPLETED AND VERIFIED BY A CITY INSPECTOR, AND THAT ALL UTILITIES BE INSTALLED, INSPECTED WITH CONNECTIONS TO MAIN LINES COMPLETED, AND ACCEPTED BY THE CITY.

2. ASPHALT PATCHING TO ROADS BETWEEN OCTOBER 15 AND APRIL 15 WILL BE CONSIDERED TEMPORARY ONLY, AND MUST REPLACED ACCORDING TO CITY STANDARDS AND SPECIFICATIONS BETWEEN THE FOLLOWING APRIL 15 AND JULY 1.

3. MATERIAL SUBMITTALS ARE REQUIRED FOR ALL ITEMS PLACED WITHIN THE CITY RIGHT-OF-WAY. ALL SUBMITTALS MUST BE DATED WITHIN 90 DAYS OF THE CONSTRUCTION START DATE (UNLESS SPECIFIED OTHERWISE). AND BE SUBMITTED PRIOR TO THE START OF CONSTRUCTION ACTIVITIES.

4. MORATORIUM STANDARD (NEW, RECONSTRUCTED, AND OVERLAID STREETS): NO CUTS PERMITTED FOR TWO (2) YEARS FROM THE TIME OF CONSTRUCTION/RECONSTRUCTION/OVERLAY).

5. SPECIAL RESTORATION STANDARD: THIS STANDARD APPLIES TO NEW, RECONSTRUCTED, OVERLAID, AND CHIP/SLURRY-SEALED STREETS:
    - A. NEW, RECONSTRUCTED, AND OVERLAID STREETS (FOR 5 YEARS AFTER END OF MORATORIUM): THE ASPHALT SHALL BE MILLED A MINIMUM DEPTH OF TWO (2) INCHES, FIFTEEN (15) EXISTING STRIPED TRAFFIC LANES. THE CITY ENGINEER RESERVES THE RIGHT TO REQUIRE ADDITIONAL AREA AND/OR DEPTH IF DEEMED APPROPRIATE TO RESTORE ROADWAY TO ORIGINAL CONDITION. APPROVED FABRIC IS REQUIRED WHEN EXISTING PAVEMENT INCLUDED A FABRIC PRIOR TO THE PERMITTED CUT.
    - B. CHIP/SLURRY-SEALED STREETS (FOR ONE YEAR AFTER CIP/SLURRY APPLICATION): THE ASPHALT SURFACE SHALL BE RE-CHIPPED/SLURRIED A MINIMUM OF FIFTEEN (15) FEET EACH WAY FROM THE EDGE OF THE CUT, IN WIDTHS EQUIVALENT TO EXISTING STRIPED TRAFFIC LANES.

6. ROADS SHALL BE OPENED FOR TRAFFIC DURING PEAK HOURS. LANE CLOSURES MAY ONLY BE IN EFFECT FROM 9AM-2PM, AND 7PM-7AM WHEN NIGHT WORK IS APPROVED. CONTRACTORS SHALL ACCOMMODATE ALL SPECIAL SCHOOL OR LOCAL GOVERNMENT SCHEDULES AND EVENTS. PAINT STRIPING SHALL BE REPLACED IN ACCORDANCE WITH CITY STANDARDS WITHIN 48-HOURS OF RESTORATION OF PAVEMENT.

7. ALL ROAD CLOSURES MUST BE APPROVED BY THE CITY ENGINEER. ALL REQUESTS FOR ROAD CLOSURES SHALL BE MADE IN WRITING AND INCLUDE A SITE-SPECIFIC TRAFFIC CONTROL PLAN FOR THE PROPOSED CLOSURE. WHEN APPROVED, CLOSURES OF COLLECTOR STREETS WILL REQUIRE A 2-WEEK ADVANCE NOTICE TO THE PUBLIC INFORMING THEM OF THE UPCOMING CLOSURE. THE NOTICE SHALL BE PROVIDED USING ON-SITE VARIABLE MESSAGE SIGN (VMS) BOARDS INDICATION THE ANTICIPATED START DATE AND DURATION OF THE CLOSURE. VMS BOARDS SHALL REMAIN ON SITE FOR THE FULL TWO-WEEK ADVANCE-NOTICE PERIOD. IF THE DURATION OF THE CLOSURE IS EXTENDED BEYOND THE APPROVED PERIOD, THE EXTENSION SHALL BE COORDINATED WITH THE CITY ENGINEER AND SHALL REQUIRE ADDITIONAL VMS BOARD NOTIFICATION TO THE PUBLIC.

ENGINEER-OF-RECORD CERTIFICATION

As the Engineer-of-Record, I hereby certify that these construction drawings and supporting information (“Plans”) comply with the Heber City Code and Standard Specifications and Drawings (“Standards”). I understand and agree that:

1. The City’s Acknowledgment of these plans shall not be construed to be a permit for, or an approval of, any variance from any of the provisions of the Standards, unless a separate written approval authorizing a specific deviation has been provided by the City Engineer.
2. The City’s Acknowledgement of these Plans, or feedback from the City on whether the Plans meet the Standards, shall not prevent the City from requiring the correction of errors in the Plans at any time, including after construction of improvements.
3. The City’s Acknowledgement of these Plans does not constitute a permit from the Federal or State Government or permission to deviate from Federal or State Laws or Regulations.
4. The City’s Acknowledgement of these Plans does not grant permission to work on the properties of others.

ABBREVIATIONS

APWA	AMERICAN PUBLIC WORKS ASSOCIATION
AR	ACCESSIBLE ROUTE
ASTM	AMERICAN SOCIETY FOR TESTING AND MATERIALS
AWWA	AMERICAN WATER WORKS ASSOCIATION
BOS	BOTTOM OF STEP
BVC	BEGIN VERTICAL CURVE
C	CURVE
CB	CATCH BASIN
CF	CURB FACE OR CUBIC FEET
CL	CENTER LINE
CO	CLEAN OUT
COMM	COMMUNICATION
CONC	CONCRETE
CONT	CONTINUOUS
DIA	DIAMETER
DIP	DUCTILE IRON PIPE
ELEC	ELECTRICAL
ELEV	ELEVATION
EOA	EDGE OF ASPHALT
EVC	END OF VERTICAL CURVE
EW	EACH WAY
EXIST	EXISTING
FF	FINISH FLOOR
FG	FINISH GRADE
FH	FIRE HYDRANT
FL	FLOW LINE OR FLANGE
GB	GRADE BREAK
GF	GARAGE FLOOR
GV	GATE VALVE
HC	HANDICAP
HP	HIGH POINT
IRR	IRRIGATION
K	RATE OF VERTICAL CURVATURE
LD	LAND DRAIN
LF	LINEAR FEET
LP	LOW POINT
MEX	MATCH EXISTING
MH	MANHOLE
MJ	MECHANICAL JOINT
NG	NATURAL GROUND
NIC	NOT IN CONTRACT
NO	NUMBER
OC	ON CENTER
OCEW	ON CENTER EACH WAY
OHP	OVERHEAD POWER
PC	POINT OF CURVATURE OR PRESSURE CLASS
PCC	POINT OF COMPOUND CURVATURE
PI	POINT OF INTERSECTION
PIV	POST INDICATOR VALVE
PL	PROPERTY LINE
PRC	POINT OF REVERSE CURVATURE
PRO	PROPOSED
PT	POINT OF TANGENCY
PVC	POINT OF VERTICAL CURVATURE
PVI	POINT OF VERTICAL INTERSECTION
PVT	POINT OF VERTICAL TANGENCY
R	RADIUS
RD	ROOF DRAIN
ROW	RIGHT OF WAY
S	SLOPE
SAN SWR	SANITARY SEWER
SD	STORM DRAIN
SEC	SECONDARY
SS	SANITARY SEWER
STA	STATION
SW	SECONDARY WATER LINE
TBC	TOP BACK OF CURB
TOG	TOP OF GRATE
TOA	TOP OF ASPHALT
TOC	TOP OF CONCRETE
TOF	TOP OF FOUNDATION
TOW	TOP OF WALL
TOS	TOP OF STEP
TYP	TYPICAL
VC	VERTICAL CURVE
WIV	WALL INDICATOR VALVE
W	WATER LINE

NOTE: MAY CONTAIN ABBREVIATIONS THAT ARE NOT USED IN THIS PLAN SET.

LEGEND

SECTION CORNER	EXISTING EDGE OF ASPHALT
EXISTING MONUMENT	PROPOSED EDGE OF ASPHALT
PROPOSED MONUMENT	EXISTING STRIPING
EXISTING REBAR AND CAP	PROPOSED STRIPING
SET ENSIGN REBAR AND CAP	EXISTING FENCE
EXISTING WATER METER	PROPOSED FENCE
PROPOSED WATER METER	EXISTING FLOW LINE
EXISTING WATER MANHOLE	PROPOSED FLOW LINE
PROPOSED WATER MANHOLE	GRADE BREAK
EXISTING WATER BOX	EXISTING STORM DRAIN LINE
EXISTING WATER VALVE	PROPOSED STORM DRAIN LINE
PROPOSED WATER VALVE	ROOF DRAIN LINE
EXISTING FIRE HYDRANT	CATCHMENTS
PROPOSED FIRE HYDRANT	HIGHWATER LINE
PROPOSED FIRE DEPARTMENT CONNECTION	EXISTING SANITARY SEWER
EXISTING SECONDARY WATER VALVE	PROPOSED SANITARY SEWER LINE
PROPOSED SECONDARY WATER VALVE	PROPOSED SAN. SWR. SERVICE LINE
EXISTING IRRIGATION BOX	EXISTING LAND DRAIN LINE
EXISTING IRRIGATION VALVE	PROPOSED LAND DRAIN LINE
PROPOSED IRRIGATION VALVE	PROPOSED LAND DRAIN SERVICE LINE
EXISTING SANITARY SEWER MANHOLE	EXISTING CULINARY WATER LINE
PROPOSED SANITARY SEWER MANHOLE	PROPOSED CULINARY WATER LINE
EXISTING SANITARY CLEAN OUT	PROPOSED CULINARY WATER SERVICE LINE
EXISTING STORM DRAIN CLEAN OUT BOX	EXISTING SECONDARY WATER LINE
PROPOSED STORM DRAIN CLEAN OUT BOX	PROPOSED SECONDARY WATER LINE
EXISTING STORM DRAIN INLET BOX	PROPOSED SEC. WATER SERVICE LINE
EXISTING STORM DRAIN CATCH BASIN	EXISTING IRRIGATION LINE
PROPOSED STORM DRAIN CATCH BASIN	PROPOSED IRRIGATION LINE
EXISTING STORM DRAIN COMBO BOX	EXISTING OVERHEAD POWER LINE
PROPOSED STORM DRAIN COMBO BOX	EXISTING ELECTRICAL LINE
EXISTING STORM DRAIN CLEAN OUT	EXISTING GAS LINE
EXISTING STORM DRAIN CULVERT	EXISTING TELEPHONE LINE
PROPOSED STORM DRAIN CULVERT	ACCESSIBLE ROUTE
TEMPORARY SAG INLET PROTECTION	SAW CUT LINE
TEMPORARY IN-LINE INLET PROTECTION	STRAW WATTLE
ROOF DRAIN	TEMPORARY BERM
EXISTING ELECTRICAL MANHOLE	TEMPORARY SILT FENCE
EXISTING ELECTRICAL BOX	LIMITS OF DISTURBANCE
EXISTING TRANSFORMER	EXISTING WALL
EXISTING UTILITY POLE	PROPOSED WALL
EXISTING LIGHT	EXISTING CONTOURS
PROPOSED LIGHT	PROPOSED CONTOURS
EXISTING GAS METER	BUILDABLE AREA WITHIN SETBACKS
EXISTING GAS MANHOLE	PUBLIC DRAINAGE EASEMENT
EXISTING GAS VALVE	EXISTING ASPHALT TO BE REMOVED
EXISTING TELEPHONE MANHOLE	PROPOSED ASPHALT
EXISTING TELEPHONE BOX	EXISTING CURB AND GUTTER
EXISTING TRAFFIC SIGNAL BOX	PROPOSED CURB AND GUTTER
EXISTING CABLE BOX	PROPOSED REVERSE PAN CURB AND GUTTER
EXISTING BOLLARD	TRANSITION TO REVERSE PAN CURB
PROPOSED BOLLARD	CONCRETE TO BE REMOVED
EXISTING SIGN	EXISTING CONCRETE
PROPOSED SIGN	PROPOSED CONCRETE
EXISTING SPOT ELEVATION	BUILDING TO BE REMOVED
PROPOSED SPOT ELEVATION	EXISTING BUILDING
EXISTING FLOW DIRECTION	PROPOSED BUILDING
EXISTING TREE	
DENSE VEGETATION	

NOTE: MAY CONTAIN SYMBOLS THAT ARE NOT USED IN THIS PLAN SET.

CITY ENGINEER ACCEPTANCE

Russell Funk 6/26/2024
Signature Date

E D
A

[A] The Boston Building
9 Exchange Place, Suite 1100
Salt Lake City, Utah 84111

[O] 801 531 7600

[E] info@edaarch.com

[W] www.edaarch.com

PROJECT ARCHITECT JB
PROJECT MANAGER SH

LICENSED PROFESSIONAL ENGINEER
Koby J. Morgan
No. 5567061
5-28-2024
STATE OF UTAH

ENSIGN
THE STANDARD IN ENGINEERING

SANDY
45 W 10000 S, Suite 500
Sandy, UT 84070
Phone: 801.255.0529

WWW.ENSIGNENG.COM

WASATCH COUNTY
COURTS EXPANSION

1361 US-40
HEBER CITY, UTAH 84032

PROJECT NUMBER		223053
#	DESCRIPTION	DATE
	PERMIT REVIEW SET	05.28.24
A2	ADDENDUM #2	06.12.24

CIVIL
GENERAL
NOTES

C-001

© EDA

BENCHMARK

NORTH QUARTER CORNER OF SECTION 8, TOWNSHIP 4 SOUTH, RANGE 5 EAST SALT LAKE BASE AND MERIDIAN (FOUND BRASS CAP)

ELEV = 5664.36'

811 Know what's below. Call before you dig.

CALL BLUESTAKES @ 811 AT LEAST 48 HOURS PRIOR TO THE COMMENCEMENT OF ANY CONSTRUCTION.

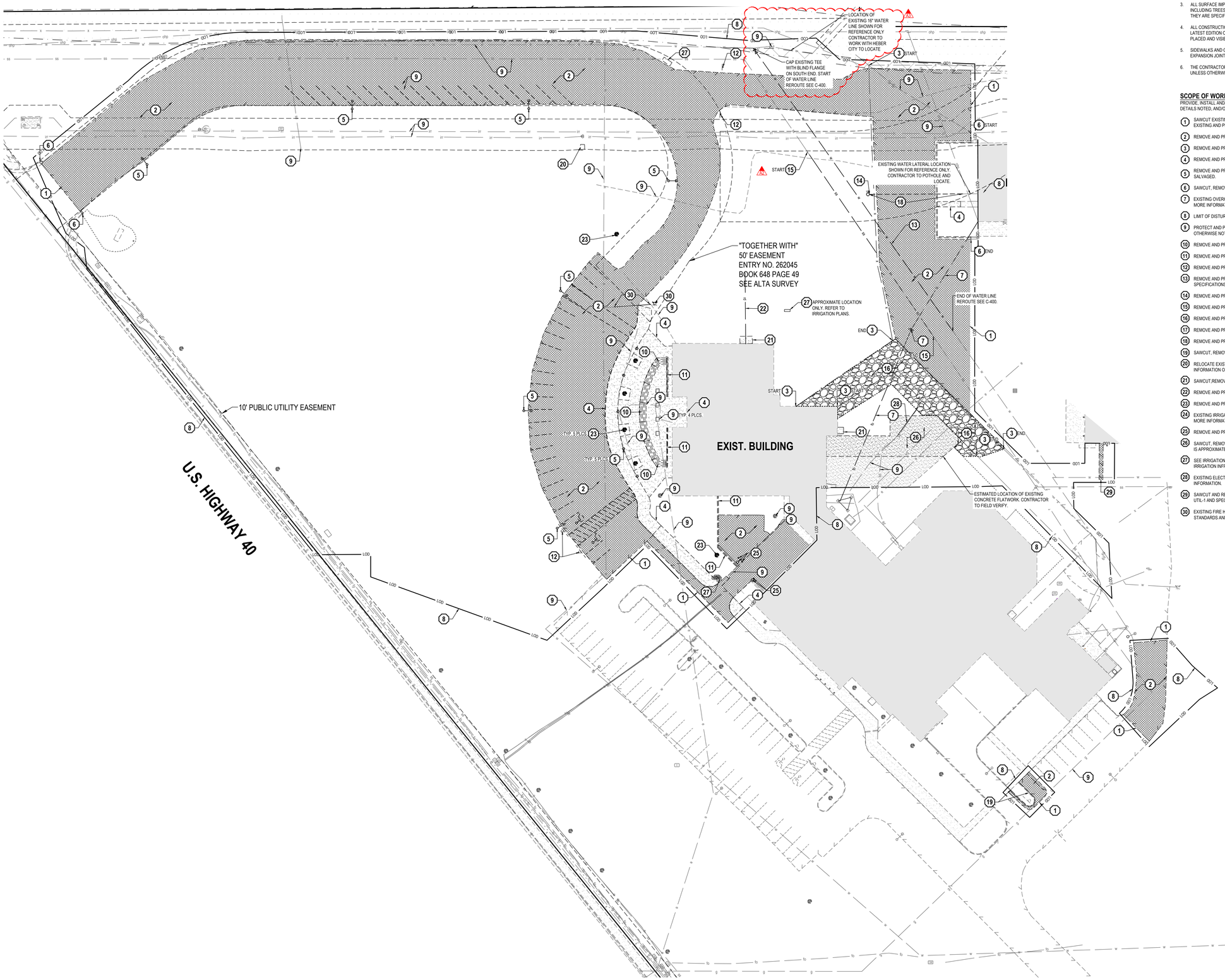

GENERAL NOTES

1. ALL WORK TO COMPLY WITH THE HEBER CITY'S STANDARDS AND SPECIFICATIONS.
2. EXISTING UNDERGROUND UTILITIES AND IMPROVEMENTS ARE SHOWN IN THEIR APPROXIMATE LOCATIONS BASED UPON RECORD INFORMATION AVAILABLE AT THE TIME OF PREPARATION OF THESE PLANS. LOCATIONS MAY NOT HAVE BEEN VERIFIED IN THE FIELD AND NO GUARANTEE IS MADE AS TO THE ACCURACY OR COMPLETENESS OF THE INFORMATION SHOWN. IT SHALL BE THE RESPONSIBILITY OF THE CONTRACTOR TO DETERMINE THE EXISTENCE AND LOCATION OF THE UTILITIES SHOWN ON THESE PLANS OR INDICATED IN THE FIELD BY LOCATING SERVICES. ANY ADDITIONAL COSTS INCURRED AS A RESULT OF THE CONTRACTOR'S FAILURE TO VERIFY THE LOCATIONS OF EXISTING UTILITIES PRIOR TO THE BEGINNING OF CONSTRUCTION IN THEIR VICINITY SHALL BE BORNE BY THE CONTRACTOR AND ASSUMED INCLUDED IN THE CONTRACT. THE CONTRACTOR IS TO VERIFY ALL CONNECTION POINTS WITH THE EXISTING UTILITIES. THE CONTRACTOR IS RESPONSIBLE FOR ANY DAMAGE CAUSED TO THE EXISTING UTILITIES AND UTILITY STRUCTURES THAT ARE TO REMAIN. IF CONFLICTS WITH EXISTING UTILITIES OCCUR, THE CONTRACTOR SHALL NOTIFY THE ENGINEER PRIOR TO CONSTRUCTION TO DETERMINE IF ANY FIELD ADJUSTMENTS SHOULD BE MADE.
3. ALL SURFACE IMPROVEMENTS DISTURBED BY CONSTRUCTION SHALL BE RESTORED OR REPLACED, INCLUDING TREES AND DECORATIVE SHRUBS, SOD, FENCES, WALLS AND STRUCTURES, WHETHER OR NOT THEY ARE SPECIFICALLY SHOWN ON THE CONTRACT DOCUMENTS.
4. ALL CONSTRUCTION SIGNAGE, BARRICADES, TRAFFIC CONTROL DEVICES, ETC. SHALL CONFORM TO THE LATEST EDITION OF THE M.U.T.C.D. THE CONTRACTOR WILL MAINTAIN SUCH SO THAT THEY ARE PROPERLY PLACED AND VISIBLE AT ALL TIMES.
5. SIDEWALKS AND CURBS DESIGNATED TO BE DEMOLISHED SHALL BE DEMOLISHED TO THE NEAREST EXPANSION JOINT, MATCHING THESE PLANS AS CLOSELY AS POSSIBLE.
6. THE CONTRACTOR IS TO PROTECT AND PRESERVE ALL EXISTING IMPROVEMENTS, UTILITIES, AND SIGNS, ETC. UNLESS OTHERWISE NOTED ON THESE PLANS.

SCOPE OF WORK:

PROVIDE, INSTALL AND/OR CONSTRUCT THE FOLLOWING PER THE SPECIFICATIONS GIVEN OR REFERENCED, THE DETAILS NOTED, AND/OR AS SHOWN ON THE CONSTRUCTION DRAWINGS:

1. SAWCUT EXISTING ASPHALT PAVEMENT TO PROVIDE A CLEAN EDGE FOR THE TRANSITION BETWEEN EXISTING AND PROPOSED ASPHALT PAVEMENT.
2. REMOVE AND PROPERLY DISPOSE OF EXISTING ASPHALT PAVEMENT.
3. REMOVE AND PROPERLY DISPOSE OF EXISTING FENCE.
4. REMOVE AND PROPERLY DISPOSE OF EXISTING SIDEWALK.
5. REMOVE AND PROPERLY DISPOSE OF EXISTING LIGHT POLE. CONSULT WITH OWNER IF LIGHT POLE TO BE SALVAGED.
6. SAWCUT, REMOVE, AND PROPERLY DISPOSE EXISTING MOUNTABLE CURB AND GUTTER.
7. EXISTING OVERHEAD FIBER OPTIC LINE AND POLE TO BE REMOVED BY OWNER. SEE ELECTRICAL PLANS FOR MORE INFORMATION.
8. LIMIT OF DISTURBANCE.
9. PROTECT AND PRESERVE ALL EXISTING IMPROVEMENTS, UTILITIES, SIGNS, ETC. (TYPICAL UNLESS OTHERWISE NOTED).
10. REMOVE AND PROPERLY DISPOSE OF EXISTING STAIRS AND HANDRAILS.
11. REMOVE AND PROPERLY DISPOSE OF EXISTING WALL.
12. REMOVE AND PROPERLY DISPOSE OF EXISTING SIGN.
13. REMOVE AND PROPERLY DISPOSE OF EXISTING 10" WATER LINE SECTION PER HEBER CITY STANDARDS AND SPECIFICATIONS.
14. REMOVE AND PROPERLY DISPOSE OF EXISTING WATER METER.
15. REMOVE AND PROPERLY DISPOSE OF EXISTING 8" SEWER LINE.
16. REMOVE AND PROPERLY DISPOSE OF EXISTING GRAVEL.
17. REMOVE AND PROPERLY DISPOSE OF EXISTING RAMP AND HANDRAILS.
18. REMOVE AND PROPERLY DISPOSE OF EXISTING WATER LATERAL LINE.
19. SAWCUT, REMOVE AND PROPERLY DISPOSE EXISTING CURB.
20. RELOCATE EXISTING IRRIGATION VAULT. SEE C-400 FOR NEW LOCATION. SEE IRRIGATION PLANS FOR MORE INFORMATION ON VAULT.
21. SAWCUT,REMOVE AND PROPERLY DISPOSE OF EXISTING CONCRETE.
22. REMOVE AND PROPERLY DISPOSE OF EXTERIOR ROOF DRAIN LINE.
23. REMOVE AND PROPERLY DISPOSE OF EXISTING TREE. UNLESS OTHERWISE NOTED ON LANDSCAPE PLANS.
24. EXISTING IRRIGATION INFRASTRUCTURE TO BE REMOVED OR RELOCATED. SEE IRRIGATION PLANS FOR MORE INFORMATION.
25. REMOVE AND PROPERLY DISPOSE OF EXISTING AUTOMATED GATE AND BOLLARDS.
26. SAWCUT, REMOVE AND PROPERLY DISPOSE OF EXISTING CONCRETE PAVEMENT. LOCATION OF PAVEMENT IS APPROXIMATE AND EXTENT OF REMOVAL TO BE FIELD VERIFIED BY CONTRACTOR.
27. SEE IRRIGATION PLANS FOR MORE INFORMATION REGARDING REMOVAL OR RELOCATION OF EXISTING IRRIGATION INFRASTRUCTURE.
28. EXISTING ELECTRICAL/TELECOMMUNICATIONS TO BE REMOVED. SEE ELECTRICAL PLANS FOR MORE INFORMATION.
29. SAWCUT AND REMOVE ASPHALT PAVEMENT FOR UTILITY TRENCHING PER HEBER CITY STANDARD DETAIL UTIL-1 AND SPECIFICATIONS.
30. EXISTING FIRE HYDRANT TO BE RELOCATED. REMOVE WATER LINE TO EXTENT SHOWN PER HEBER CITY STANDARDS AND SPECIFICATIONS. SEE C-400 FOR NEW LOCATION.

E D
A

[A] The Boston Building
9 Exchange Place, Suite 1100
Salt Lake City, Utah 84111

[O] 801 531 7600

[E] info@edaarch.com

[W] www.edaarch.com

PROJECT ARCHITECT	JB
PROJECT MANAGER	SH

LICENSED PROFESSIONAL ENGINEER
Kent Morgan
No. 5567061
5-28-2024
STATE OF UTAH

ENSIGN
THE STANDARD IN ENGINEERING

SANDY
45 W 10000 S, Suite 500
Sandy, UT 84070
Phone: 801.255.0529

WWW.ENSIGNENG.COM

WASATCH COUNTY
COURTS EXPANSION

1361 US-40
HEBER CITY, UTAH 84032

PROJECT NUMBER		223053
#	DESCRIPTION	DATE
	PERMIT REVIEW SET	05.28.24
A2	ADDENDUM #2	06.12.24
A3	ADDENDUM #3	06.17.24

CITY ENGINEER ACCEPTANCE

Russell Funk — Signature
6/26/2024 — Date

NORTH

HORIZONTAL GRAPHIC SCALE

30 0 15 30 60

(IN FEET)
HORZ: 1 inch = 30 ft.

CIVIL
DEMOLITION
PLAN

C-100

© EDA

BENCHMARK

NORTH QUARTER CORNER OF SECTION 8, TOWNSHIP 4 SOUTH, RANGE 5 EAST SALT LAKE BASE AND MERIDIAN (FOUND BRASS CAP)

ELEV = 5664.36'

811 Know what's below. Call before you dig.

CALL BLUESTAKES @ 811 AT LEAST 48 HOURS PRIOR TO THE COMMENCEMENT OF ANY CONSTRUCTION.

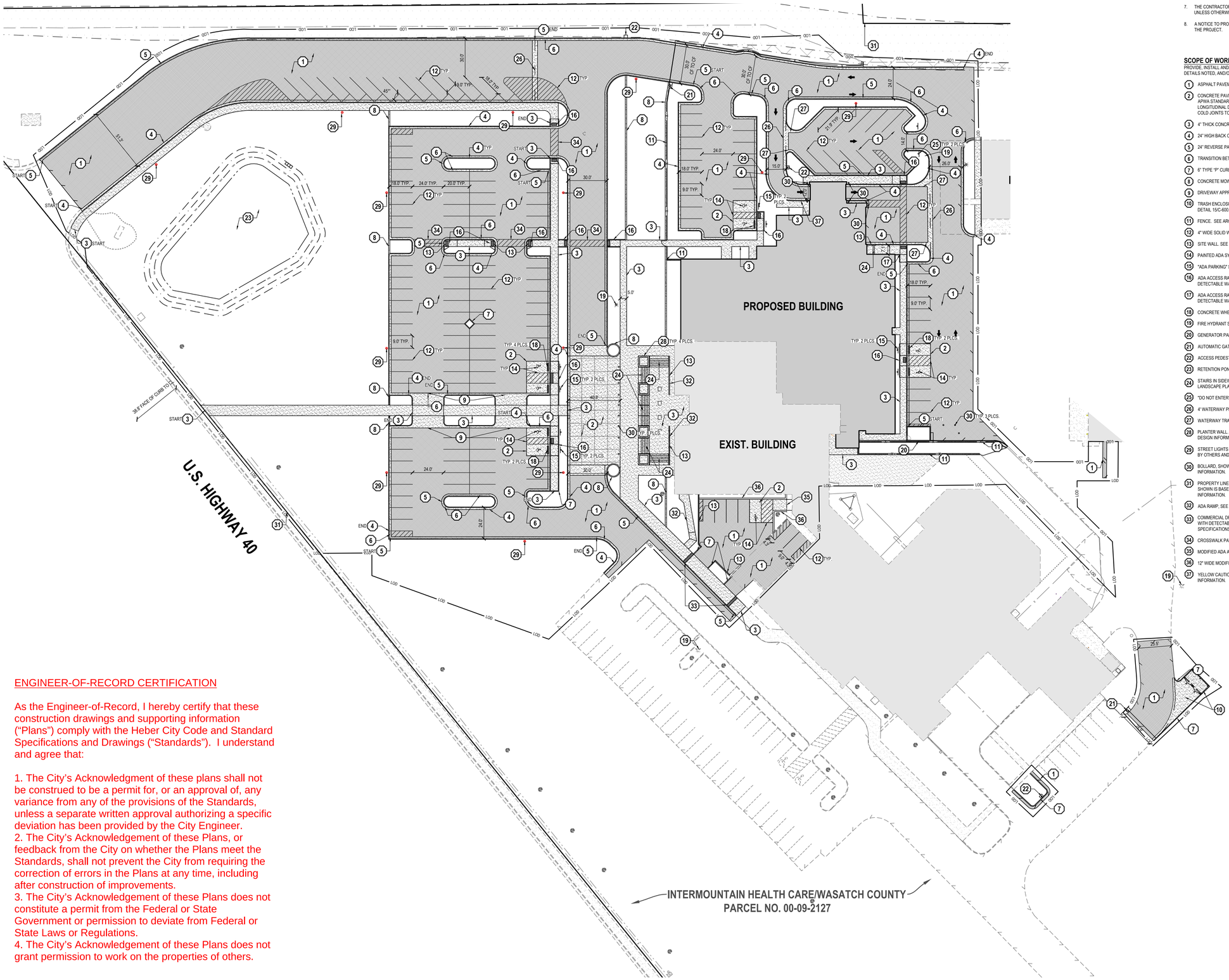

GENERAL NOTES

1. ALL WORK TO COMPLY WITH THE HEBER CITY'S STANDARDS AND SPECIFICATIONS.
2. ALL IMPROVEMENTS MUST COMPLY WITH ADA STANDARDS AND RECOMMENDATIONS.
3. SEE LANDSCAPE/ARCHITECTURAL PLANS FOR CONCRETE MATERIAL, COLOR, FINISH, AND SCORE PATTERNS THROUGHOUT SITE.
4. ALL PAVEMENT MARKINGS SHALL CONFORM TO THE LATEST EDITION OF THE M.U.T.C.D. (MANUAL ON UNIFORM TRAFFIC CONTROL DEVICES).
5. ALL SURFACE IMPROVEMENTS DISTURBED BY CONSTRUCTION SHALL BE RESTORED OR REPLACED, INCLUDING TREES AND DECORATIVE SHRUBS, SOD, FENCES, WALLS AND STRUCTURES, WHETHER OR NOT THEY ARE SPECIFICALLY SHOWN ON THE CONTRACT DOCUMENTS.
6. NOTIFY ENGINEER OF ANY DISCREPANCIES IN DESIGN OR STAKING BEFORE PLACING CONCRETE OR ASPHALT.
7. THE CONTRACTOR IS TO PROTECT AND PRESERVE ALL EXISTING IMPROVEMENTS, UTILITIES, AND SIGNS, ETC. UNLESS OTHERWISE NOTED ON THESE PLANS.
8. A NOTICE TO PROCEED MUST BE OBTAINED FROM THE HEBER CITY ENGINEER PRIOR TO DOING ANY WORK ON THE PROJECT.

SCOPE OF WORK:

PROVIDE, INSTALL AND/OR CONSTRUCT THE FOLLOWING PER THE SPECIFICATIONS GIVEN OR REFERENCED, THE DETAILS NOTED, AND/OR AS SHOWN ON THE CONSTRUCTION DRAWINGS:

1. ASPHALT PAVEMENT PER GEOTECHNICAL REPORT AND DETAIL 2/C-600.
2. CONCRETE PAVEMENT PER GEOTECHNICAL REPORT AND DETAIL 1/C-600. CONTRACTION JOINTS AS PER APWA STANDARD PLANS 261.1, 261.2, 261.3, 261.4, AND 261.5. 10' MAXIMUM SPACING IN TRANSVERSE AND LONGITUDINAL DIRECTIONS. EXPANSION, CONTRACTION JOINTS AT MAXIMUM 125' SPACING AND AT ALL COLD JOINTS TO BE INSTALLED PER APWA STANDARD PLANS 261.1, 261.2, 261.3, 261.4, AND 261.5
3. 4" THICK CONCRETE SIDEWALK PER HEBER CITY STANDARD DETAIL STREETS-4 AND SPECIFICATIONS.
4. 24" HIGH BACK CURB AND GUTTER PER HEBER CITY STANDARD DETAIL STREETS-4 AND SPECIFICATIONS.
5. 24" REVERSE PAN CURB AND GUTTER PER DETAIL 8/C-600.
6. TRANSITION BETWEEN COLLECTION CURB AND GUTTER AND REVERSE PAN CURB AND GUTTER.
7. 6" TYPE "9" CURB WALL PER APWA STANDARD PLAN NO. 209.
8. CONCRETE MOW CURB. SEE LANDSCAPE PLANS FOR ADDITIONAL INFORMATION.
9. DRIVEWAY APPROACH PER APWA STANDARD PLAN NO. 225.
10. TRASH ENCLOSURE SEE ARCHITECTURAL PLANS FOR DESIGN INFORMATION. DUMPSTER PAD/APRON PER DETAIL 15/C-600.
11. FENCE. SEE ARCHITECTURAL PLANS FOR ADDITIONAL INFORMATION.
12. 4" WIDE SOLID WHITE PAVEMENT MARKING PER M.U.T.C.D. STANDARD PLANS.
13. SITE WALL. SEE STRUCTURAL PLANS FOR MORE INFORMATION.
14. PAINTED ADA SYMBOL AND ASSOCIATED HATCHING PER M.U.T.C.D. STANDARD PLANS.
15. "ADA PARKING" SIGN PER M.U.T.C.D. STANDARD PLANS.
16. ADA ACCESS RAMP MID-BLOCK PER HEBER CITY STANDARD DETAIL STREETS-7 AND SPECIFICATIONS WITH DETECTABLE WARNING SURFACE.
17. ADA ACCESS RAMP CORNER PER HEBER CITY STANDARD DETAIL STREETS-7 AND SPECIFICATIONS WITH DETECTABLE WARNING SURFACE.
18. CONCRETE WHEEL STOP PER DETAIL 3/C-600.
19. FIRE HYDRANT SHOWN FOR REFERENCE.
20. GENERATOR PAD PER ARCHITECTURAL AND ELECTRICAL PLANS.
21. AUTOMATIC GATE PER ARCHITECTURAL AND ELECTRICAL PLANS.
22. ACCESS PEDESTAL PER ARCHITECTURAL AND ELECTRICAL PLANS.
23. RETENTION POND DETAILS PER C-300 AND LANDSCAPING PER LANDSCAPING PLANS.
24. STAIRS IN SIDEWALK. SEE GRADING PLAN FOR ELEVATION INFORMATION. SEE ARCHITECTURAL AND LANDSCAPE PLANS FOR DETAILS AND HANDRAIL INFORMATION.
25. "DO NOT ENTER" SIGN PER M.U.T.C.D. STANDARD PLANS.
26. 4' WATERWAY PER HEBER CITY STANDARD DETAIL STREETS-4 AND SPECIFICATIONS.
27. WATERWAY TRANSITION STRUCTURE PER APWA STANDARD PLAN NO. 213.
28. PLANTER WALL. SEE GRADING PLAN FOR ELEVATION INFORMATION, SEE ARCHITECTURAL PLANS FOR DESIGN INFORMATION.
29. STREET LIGHTS ARE SHOWN FOR REFERENCE ONLY. INFORMATION SHOWN IS BASED ON WORK COMPLETED BY OTHERS AND IS SUBJECT TO CHANGE. SEE ELECTRICAL DRAWINGS FOR MORE INFORMATION.
30. BOLLARD, SHOWN FOR REFERENCE. SEE LANDSCAPE AND ARCHITECTURAL PLANS FOR MORE INFORMATION.
31. PROPERTY LINES ILLUSTRATED ON THIS DRAWING ARE SHOWN FOR REFERENCE ONLY. THE INFORMATION SHOWN IS BASED ON WORK COMPLETED BY OTHERS. REFER TO THE ALTA SURVEY FOR ADDITIONAL INFORMATION.
32. ADA RAMP, SEE ARCHITECTURAL PLANS FOR MORE INFORMATION. SEE C-300 FOR GRADING INFORMATION.
33. COMMERCIAL DRIVEWAY APPROACH PER HEBER CITY STANDARD DETAIL STREETS-8 AND SPECIFICATIONS WITH DETECTABLE WARNING SURFACE PER HEBER CITY STANDARD DETAIL STREETS-6 AND SPECIFICATIONS.
34. CROSSWALK PAVEMENT MARKING PER M.U.T.C.D. STANDARD PLANS.
35. MODIFIED ADA ACCESS RAMP PER APWA STANDARD PLAN NO. 235.1.
36. 12" WIDE MODIFIED 'P' CURB PER APWA STANDARD PLAN NO. 209.
37. YELLOW CAUTION PAINT PER M.U.T.C.D STANDARDS AT VARIABLE CURB. SEE C-300 FOR GRADING INFORMATION.

E D
A

[A] The Boston Building
9 Exchange Place, Suite 1100
Salt Lake City, Utah 84111

[O] 801 531 7600

[E] info@edaarch.com

[W] www.edaarch.com

PROJECT ARCHITECT	JB
PROJECT MANAGER	SH

LICENSED PROFESSIONAL ENGINEER
Kevin Morgan
No. 5567061
5-28-2024
STATE OF UTAH

ENSIGN
THE STANDARD IN ENGINEERING

SANDY
45 W 10000 S, Suite 500
Sandy, UT 84070
Phone: 801.255.0529

WWW.ENSIGNENG.COM

WASATCH COUNTY
COURTS EXPANSION

1361 US-40
HEBER CITY, UTAH 84032

PROJECT NUMBER 223053

#	DESCRIPTION	DATE
	PERMIT REVIEW SET	05.28.24
1	ADDENDUM #2	06.12.24

CITY ENGINEER ACCEPTANCE

Russell Funk — Signature
6/26/2024 — Date

ENGINEER-OF-RECORD CERTIFICATION

As the Engineer-of-Record, I hereby certify that these construction drawings and supporting information ("Plans") comply with the Heber City Code and Standard Specifications and Drawings ("Standards"). I understand and agree that:

1. The City's Acknowledgment of these plans shall not be construed to be a permit for, or an approval of, any variance from any of the provisions of the Standards, unless a separate written approval authorizing a specific deviation has been provided by the City Engineer.
2. The City's Acknowledgement of these Plans, or feedback from the City on whether the Plans meet the Standards, shall not prevent the City from requiring the correction of errors in the Plans at any time, including after construction of improvements.
3. The City's Acknowledgement of these Plans does not constitute a permit from the Federal or State Government or permission to deviate from Federal or State Laws or Regulations.
4. The City's Acknowledgement of these Plans does not grant permission to work on the properties of others.

NORTH

HORIZONTAL GRAPHIC SCALE
30 0 15 30 60
(IN FEET)
HORZ: 1 inch = 30 ft.

CIVIL
SITE
PLAN

C-200

© EDA

BENCHMARK

NORTH QUARTER CORNER OF SECTION 8, TOWNSHIP 4 SOUTH, RANGE 5 EAST SALT LAKE BASE AND MERIDIAN (FOUND BRASS CAP)

ELEV = 5664.36'

811 Know what's below. Call before you dig.

CALL BLUESTAKES @ 811 AT LEAST 48 HOURS PRIOR TO THE COMMENCEMENT OF ANY CONSTRUCTION.

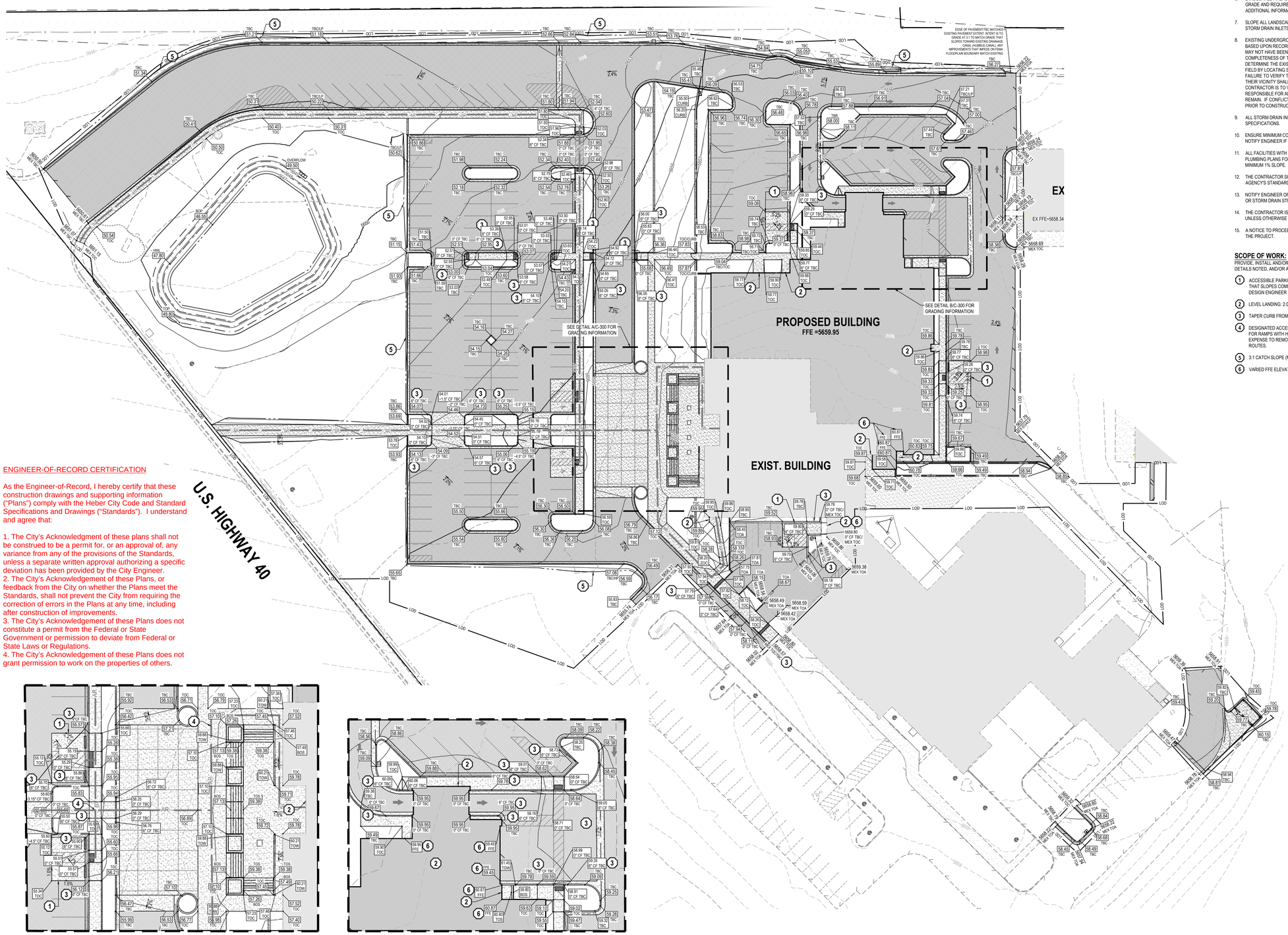

ENGINEER-OF-RECORD CERTIFICATION

As the Engineer-of-Record, I hereby certify that these construction drawings and supporting information ("Plans") comply with the Heber City Code and Standard Specifications and Drawings ("Standards"). I understand and agree that:

1. The City's Acknowledgment of these plans shall not be construed to be a permit for, or an approval of, any variance from any of the provisions of the Standards, unless a separate written approval authorizing a specific deviation has been provided by the City Engineer.
2. The City's Acknowledgement of these Plans, or feedback from the City on whether the Plans meet the Standards, shall not prevent the City from requiring the correction of errors in the Plans at any time, including after construction of improvements.
3. The City's Acknowledgement of these Plans does not constitute a permit from the Federal or State Government or permission to deviate from Federal or State Laws or Regulations.
4. The City's Acknowledgement of these Plans does not grant permission to work on the properties of others.

A C-300 **GRADING DETAIL**
SCALE: 1" = 20'

B C-300 **GRADING DETAIL**
SCALE: 1" = 20'

GENERAL NOTES

1. ALL WORK TO COMPLY WITH THE HEBER CITY'S STANDARDS AND SPECIFICATIONS.
2. ALL IMPROVEMENTS MUST COMPLY WITH ADA STANDARDS AND RECOMMENDATIONS.
3. ALL WORK SHALL COMPLY WITH THE RECOMMENDATIONS OF THE GEOTECHNICAL ENGINEER POSSIBLY INCLUDING, BUT NOT LIMITED TO, REMOVAL OF UNCONSOLIDATED FILL, ORGANICS, AND DEBRIS, PLACEMENT OF SUBSURFACE DRAIN LINES AND GEOTEXTILE, AND OVEREXCAVATION OF UNSUITABLE BEARING MATERIALS AND PLACEMENT OF ACCEPTABLE FILL MATERIAL.
4. THE CONTRACTOR SHALL BECOME FAMILIAR WITH THE EXISTING SOIL CONDITIONS.
5. ELEVATIONS HAVE BEEN TRUNCATED FOR CLARITY. XX.XX REPRESENTS AN ELEVATION OF 56XX.XX ON THESE PLANS.
6. LANDSCAPED AREAS REQUIRE SUBGRADE TO BE MAINTAINED AT A SPECIFIC ELEVATION BELOW FINISHED GRADE AND REQUIRE SUBGRADE TO BE PROPERLY PREPARED AND SCARIFIED. SEE LANDSCAPE PLANS FOR ADDITIONAL INFORMATION.
7. SLOPE ALL LANDSCAPED AREAS AWAY FROM BUILDING FOUNDATIONS TOWARD CURB AND GUTTER OR STORM DRAIN INLETS.
8. EXISTING UNDERGROUND UTILITIES AND IMPROVEMENTS ARE SHOWN IN THEIR APPROXIMATE LOCATIONS BASED UPON RECORD INFORMATION AVAILABLE AT THE TIME OF PREPARATION OF THESE PLANS. LOCATIONS MAY NOT HAVE BEEN VERIFIED IN THE FIELD AND NO GUARANTEE IS MADE AS TO THE ACCURACY OR COMPLETENESS OF THE INFORMATION SHOWN. IT SHALL BE THE RESPONSIBILITY OF THE CONTRACTOR TO DETERMINE THE EXISTENCE AND LOCATION OF THE UTILITIES SHOWN ON THESE PLANS OR INDICATED IN THE FIELD BY LOCATING SERVICES. ANY ADDITIONAL COSTS INCURRED AS A RESULT OF THE CONTRACTOR'S FAILURE TO VERIFY THE LOCATIONS OF EXISTING UTILITIES PRIOR TO THE BEGINNING OF CONSTRUCTION IN THEIR VICINITY SHALL BE BORNE BY THE CONTRACTOR AND ASSUMED INCLUDED IN THE CONTRACT. THE CONTRACTOR IS TO VERIFY ALL CONNECTION POINTS WITH THE EXISTING UTILITIES. THE CONTRACTOR IS RESPONSIBLE FOR ANY DAMAGE CAUSED TO THE EXISTING UTILITIES AND UTILITY STRUCTURES THAT ARE TO REMAIN. IF CONFLICTS WITH EXISTING UTILITIES OCCUR, THE CONTRACTOR SHALL NOTIFY THE ENGINEER PRIOR TO CONSTRUCTION TO DETERMINE IF ANY FIELD ADJUSTMENTS SHOULD BE MADE.
9. ALL STORM DRAIN INFRASTRUCTURE TO BE INSTALLED PER HEBER CITY OR APWA STANDARD PLANS AND SPECIFICATIONS.
10. ENSURE MINIMUM COVER OVER ALL STORM DRAIN PIPES PER MANUFACTURER'S RECOMMENDATIONS. NOTIFY ENGINEER IF MINIMUM COVER CANNOT BE ATTAINED.
11. ALL FACILITIES WITH DOWNSPOUTS/ROOF DRAINS SHALL BE CONNECTED TO THE STORM DRAIN SYSTEM. SEE PLUMBING PLANS FOR DOWNSPOUT/ROOF DRAIN LOCATIONS AND SIZES. ALL ROOF DRAINS TO HAVE MINIMUM 1% SLOPE.
12. THE CONTRACTOR SHALL ADJUST TO GRADE ALL EXISTING UTILITIES AS NEEDED PER LOCAL GOVERNING AGENCY'S STANDARDS AND SPECIFICATIONS.
13. NOTIFY ENGINEER OF ANY DISCREPANCIES IN DESIGN OR STAKING BEFORE PLACING CONCRETE, ASPHALT, OR STORM DRAIN STRUCTURES OR PIPES.
14. THE CONTRACTOR IS TO PROTECT AND PRESERVE ALL EXISTING IMPROVEMENTS, UTILITIES, AND SIGNS, ETC. UNLESS OTHERWISE NOTED ON THESE PLANS.
15. A NOTICE TO PROCEED MUST BE OBTAINED FROM THE HEBER CITY ENGINEER PRIOR TO DOING ANY WORK ON THE PROJECT.

SCOPE OF WORK:

PROVIDE, INSTALL AND/OR CONSTRUCT THE FOLLOWING PER THE SPECIFICATIONS GIVEN OR REFERENCED, THE DETAILS NOTED, AND/OR AS SHOWN ON THE CONSTRUCTION DRAWINGS.

1. ACCESSIBLE PARKING: SLOPES SHALL NOT EXCEED 2.00% IN ANY DIRECTION. CONTRACTOR TO VERIFY THAT SLOPES COMPLY WITH THE MAXIMUM SLOPE REQUIREMENTS AFTER FORMS ARE SET AND TO NOTIFY DESIGN ENGINEER IF DISCREPANCIES EXIST PRIOR TO INSTALLATION OF PAVING.
2. LEVEL LANDING: 2.00% MAX. SLOPE FOR A MIN. OF 5' FROM DOORS OR STAIRS.
3. TAPER CURB FROM 6" CURB FACE TO 0" CURB FACE OR AS NOTED ON THE PLAN.
4. DESIGNATED ACCESSIBLE ROUTE. ENSURE GRADES DO NOT EXCEED 5.00% RUNNING SLOPE (1:12 OR 8.33% FOR RAMPS WITH HANDRAILS) AND 2.00% CROSS SLOPE. CONTRACTOR WILL BE REQUIRED AT OWN EXPENSE TO REMOVE AND REPLACE ANY AREAS WHICH EXCEED THE MAXIMUM SLOPES ALONG ACCESSIBLE ROUTES.
5. 3:1 CATCH SLOPE (MAX) TO MATCH EXISTING GRADE.
6. VARIED FFE ELEVATION. SEE ARCHITECTURAL PLANS FOR MORE INFORMATION.

E D
A

[A] The Boston Building
9 Exchange Place, Suite 1100
Salt Lake City, Utah 84111

[O] 801 531 7600

[E] info@edaarch.com

[W] www.edaarch.com

PROJECT ARCHITECT JB
PROJECT MANAGER SH

LICENSED PROFESSIONAL ENGINEER
Kent Morgan
No. 5567061
5-28-2024
STATE OF UTAH

ENSIGN
THE STANDARD IN ENGINEERING

SANDY
45 W 10000 S, Suite 500
Sandy, UT 84070
Phone: 801.255.0529

WWW.ENSIGNENG.COM

WASATCH COUNTY
COURTS EXPANSION

1361 US-40
HEBER CITY, UTAH 84032

PROJECT NUMBER 223053

#	DESCRIPTION	DATE
	PERMIT REVIEW SET	05.28.24
1	ADDENDUM #2	06.12.24

CITY ENGINEER ACCEPTANCE

Russell Funk — 6/26/2024
Signature — Date

NORTH

HORIZONTAL GRAPHIC SCALE
30 0 15 30 60
(IN FEET)
HORZ: 1 inch = 30 ft.

GRADING
PLAN

C-300

© EDA

BENCHMARK

NORTH QUARTER CORNER OF SECTION 8, TOWNSHIP 4 SOUTH, RANGE 5 EAST SALT LAKE BASE AND MERIDIAN (FOUND BRASS CAP)

ELEV = 5664.36'

811 Know what's below. Call before you dig.

CALL BLUESTAKES @ 811 AT LEAST 48 HOURS PRIOR TO THE COMMENCEMENT OF ANY CONSTRUCTION.

I HEREBY CERTIFY THAT THIS DESIGN FOR THE MANAGEMENT OF STORM WATER OF THIS DEVELOPMENT WAS PREPARED BY ME, OR UNDER MY DIRECT SUPERVISION IN ACCORDANCE WITH THE PROVISIONS OF HEBER CITY'S DRAINAGE MANUAL AND STANDARD SPECIFICATIONS AND DRAWINGS, AND WAS DESIGNED TO COMPLY WITH THE PROVISIONS THEREOF. I UNDERSTAND THAT THE CITY ASSUMES NO RESPONSIBILITY OR LIABILITY FOR THIS DRAINAGE PLAN.

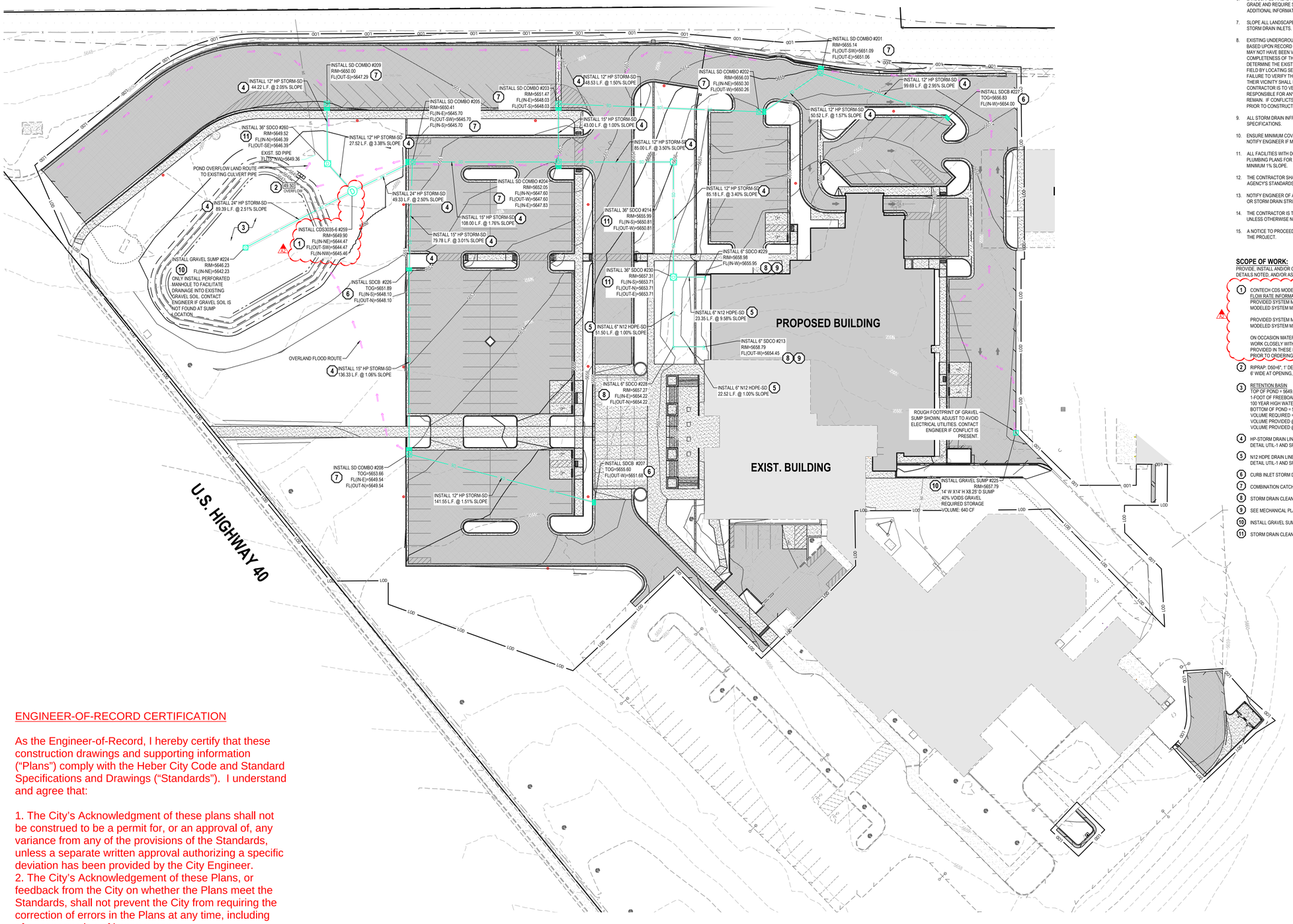

GENERAL NOTES

1. ALL WORK TO COMPLY WITH THE HEBER CITY'S STANDARDS AND SPECIFICATIONS.
2. ALL IMPROVEMENTS MUST COMPLY WITH ADA STANDARDS AND RECOMMENDATIONS.
3. ALL WORK SHALL COMPLY WITH THE RECOMMENDATIONS OF THE GEOTECHNICAL ENGINEER POSSIBLY INCLUDING, BUT NOT LIMITED TO, REMOVAL OF UNCONSOLIDATED FILL, ORGANICS, AND DEBRIS, PLACEMENT OF SUBSURFACE DRAIN LINES AND GEOTEXTILE, AND OVEREXCAVATION OF UNSUITABLE BEARING MATERIALS AND PLACEMENT OF ACCEPTABLE FILL MATERIAL.
4. THE CONTRACTOR SHALL BECOME FAMILIAR WITH THE EXISTING SOIL CONDITIONS.
5. ELEVATIONS HAVE BEEN TRUNCATED FOR CLARITY. XX.XX REPRESENTS AN ELEVATION OF 56XX.XX ON THESE PLANS.
6. LANDSCAPED AREAS REQUIRE SUBGRADE TO BE MAINTAINED AT A SPECIFIC ELEVATION BELOW FINISHED GRADE AND REQUIRE SUBGRADE TO BE PROPERLY PREPARED AND SCARIFIED. SEE LANDSCAPE PLANS FOR ADDITIONAL INFORMATION.
7. SLOPE ALL LANDSCAPED AREAS AWAY FROM BUILDING FOUNDATIONS TOWARD CURB AND GUTTER OR STORM DRAIN INLETS.
8. EXISTING UNDERGROUND UTILITIES AND IMPROVEMENTS ARE SHOWN IN THEIR APPROXIMATE LOCATIONS BASED UPON RECORD INFORMATION AVAILABLE AT THE TIME OF PREPARATION OF THESE PLANS. LOCATIONS MAY NOT HAVE BEEN VERIFIED IN THE FIELD AND NO GUARANTEE IS MADE AS TO THE ACCURACY OR COMPLETENESS OF THE INFORMATION SHOWN. IT SHALL BE THE RESPONSIBILITY OF THE CONTRACTOR TO DETERMINE THE EXISTENCE AND LOCATION OF THE UTILITIES SHOWN ON THESE PLANS OR INDICATED IN THE FIELD BY LOCATING SERVICES. ANY ADDITIONAL COSTS INCURRED AS A RESULT OF THE CONTRACTOR'S FAILURE TO VERIFY THE LOCATIONS OF EXISTING UTILITIES PRIOR TO THE BEGINNING OF CONSTRUCTION IN THEIR VICINITY SHALL BE BORNE BY THE CONTRACTOR AND ASSUMED INCLUDED IN THE CONTRACT. THE CONTRACTOR IS TO VERIFY ALL CONNECTION POINTS WITH THE EXISTING UTILITIES. THE CONTRACTOR IS RESPONSIBLE FOR ANY DAMAGE CAUSED TO THE EXISTING UTILITIES AND UTILITY STRUCTURES THAT ARE TO REMAIN. IF CONFLICTS WITH EXISTING UTILITIES OCCUR, THE CONTRACTOR SHALL NOTIFY THE ENGINEER PRIOR TO CONSTRUCTION TO DETERMINE IF ANY FIELD ADJUSTMENTS SHOULD BE MADE.
9. ALL STORM DRAIN INFRASTRUCTURE TO BE INSTALLED PER HEBER CITY OR APWA STANDARD PLANS AND SPECIFICATIONS.
10. ENSURE MINIMUM COVER OVER ALL STORM DRAIN PIPES PER MANUFACTURER'S RECOMMENDATIONS. NOTIFY ENGINEER IF MINIMUM COVER CANNOT BE ATTAINED.
11. ALL FACILITIES WITH DOWNSPOUTS/ROOF DRAINS SHALL BE CONNECTED TO THE STORM DRAIN SYSTEM. SEE PLUMBING PLANS FOR DOWNSPOUT/ROOF DRAIN LOCATIONS AND SIZES. ALL ROOF DRAINS TO HAVE MINIMUM 1% SLOPE.
12. THE CONTRACTOR SHALL ADJUST TO GRADE ALL EXISTING UTILITIES AS NEEDED PER LOCAL GOVERNING AGENCY'S STANDARDS AND SPECIFICATIONS.
13. NOTIFY ENGINEER OF ANY DISCREPANCIES IN DESIGN OR STAKING BEFORE PLACING CONCRETE, ASPHALT, OR STORM DRAIN STRUCTURES OR PIPES.
14. THE CONTRACTOR IS TO PROTECT AND PRESERVE ALL EXISTING IMPROVEMENTS, UTILITIES, AND SIGNS, ETC. UNLESS OTHERWISE NOTED ON THESE PLANS.
15. A NOTICE TO PROCEED MUST BE OBTAINED FROM THE HEBER CITY ENGINEER PRIOR TO DOING ANY WORK ON THE PROJECT.

SCOPE OF WORK:

PROVIDE, INSTALL AND/OR CONSTRUCT THE FOLLOWING PER THE SPECIFICATIONS GIVEN OR REFERENCED, THE DETAILS NOTED, AND/OR AS SHOWN ON THE CONSTRUCTION DRAWINGS:

1. CONTECH CDS MODEL CDS3035-6. SEE C-600 FOR MANUFACTURER DETAIL.
   FLOW RATE INFORMATION
   PROVIDED SYSTEM MAX TREATMENT RATE: 3.8 CFS
   MODELED SYSTEM MAX TREATMENT RATE: 3.65 CFS (2 YEAR STORM EVENT)

   PROVIDED SYSTEM MAX HYDRAULIC RATE: 20 CFS
   MODELED SYSTEM MAX HYDRAULIC RATE: 12.27 CFS

   ON OCCASION MATERIALS AND MANUFACTURER INSTALLATION PROCEDURES CHANGE. CONTRACTOR SHALL WORK CLOSELY WITH ADS (MANUFACTURER) TO ENSURE SYSTEM IS INSTALLED PER THE DESIGN INTENT PROVIDED IN THESE DRAWINGS. PROVIDE SHOP DRAWINGS TO OWNER AND DESIGN TEAM FOR REVIEW PRIOR TO ORDERING MATERIALS.
2. RIPRAP: D50=6", 1' DEEP PER SPECIFICATIONS. PLACE RIPRAP WITH THE FOLLOWING MINIMUM DIMENSIONS: 6' WIDE AT OPENING, 18' WIDE AT DISCHARGE, 30' IN LENGTH.
3. RETENTION BASIN
   TOP OF POND = 5649.80
   1-FOOT OF FREEBOARD = 5648.80
   100 YEAR HIGH WATER ELEVATION =5647.80
   BOTTOM OF POND = 5646.55
   VOLUME REQUIRED = 9,432 C.F.
   VOLUME PROVIDED @ HWL= 10,085 C.F.
   VOLUME PROVIDED @ 1-FOOT OF FREEBOARD = 19,652 C.F.
4. HP-STORM DRAIN LINE OR APPROVED EQUAL. INSTALLATION AND TRENCHING PER HEBER CITY STANDARD DETAIL UTIL-1 AND SPECIFICATIONS. SIZE, LENGTH AND SLOPE PER PLAN.
5. N12 HDPE DRAIN LINE OR APPROVED EQUAL. INSTALLATION AND TRENCHING PER HEBER CITY STANDARD DETAIL UTIL-1 AND SPECIFICATIONS. SIZE, LENGTH AND SLOPE PER PLAN.
6. CURB INLET STORM DRAIN CATCH BASIN PER HEBER CITY STANDARD DETAIL DRAIN-4.
7. COMBINATION CATCH BASIN AND CLEANOUT BOX PER APWA STANDARD PLAN NO. 316 AND SPECIFICATIONS.
8. STORM DRAIN CLEANOUT TO GRADE PER DETAIL 9/C-600.
9. SEE MECHANICAL PLANS FOR CONTINUATION.
10. INSTALL GRAVEL SUMP PER DETAIL 13/C-600. SIZE PER PLAN/SPECIFIC INSTALLATION REQUIREMENTS.
11. STORM DRAIN CLEANOUT BOX PER APWA STANDARD PLAN NO. 331.2 SIZE PER PLAN

ENGINEER-OF-RECORD CERTIFICATION

As the Engineer-of-Record, I hereby certify that these construction drawings and supporting information ("Plans") comply with the Heber City Code and Standard Specifications and Drawings ("Standards"). I understand and agree that:

1. The City's Acknowledgment of these plans shall not be construed to be a permit for, or an approval of, any variance from any of the provisions of the Standards, unless a separate written approval authorizing a specific deviation has been provided by the City Engineer.
2. The City's Acknowledgement of these Plans, or feedback from the City on whether the Plans meet the Standards, shall not prevent the City from requiring the correction of errors in the Plans at any time, including after construction of improvements.
3. The City's Acknowledgement of these Plans does not constitute a permit from the Federal or State Government or permission to deviate from Federal or State Laws or Regulations.
4. The City's Acknowledgement of these Plans does not grant permission to work on the properties of others.

CITY ENGINEER ACCEPTANCE

Russell Funk — Signature
6/26/2024 — Date

HORIZONTAL GRAPHIC SCALE
30 0 15 30 60
(IN FEET)
HORZ: 1 inch = 30 ft.

E D A

[A] The Boston Building
9 Exchange Place, Suite 1100
Salt Lake City, Utah 84111

[O] 801 531 7600

[E] info@edaarch.com

[W] www.edaarch.com

PROJECT ARCHITECT JB
PROJECT MANAGER SH

LICENSED PROFESSIONAL ENGINEER — Kent Morgan — No. 5567061 — 5-28-2024 — STATE OF UTAH

ENSIGN
THE STANDARD IN ENGINEERING

SANDY
45 W 10000 S, Suite 500
Sandy, UT 84070
Phone: 801.255.0529

WWW.ENSIGNENG.COM

WASATCH COUNTY COURTS EXPANSION

1361 US-40
HEBER CITY, UTAH 84032

PROJECT NUMBER 223053

#	DESCRIPTION	DATE
	PERMIT REVIEW SET	05.28.24
1	ADDENDUM #2	06.12.24

DRAINAGE PLAN

C-301

© EDA

BENCHMARK

NORTH QUARTER CORNER OF SECTION 8, TOWNSHIP 4 SOUTH, RANGE 5 EAST SALT LAKE BASE AND MERIDIAN (FOUND BRASS CAP)

ELEV = 5664.36'

811 Know what's below. Call before you dig.

CALL BLUESTAKES @ 811 AT LEAST 48 HOURS PRIOR TO THE COMMENCEMENT OF ANY CONSTRUCTION.

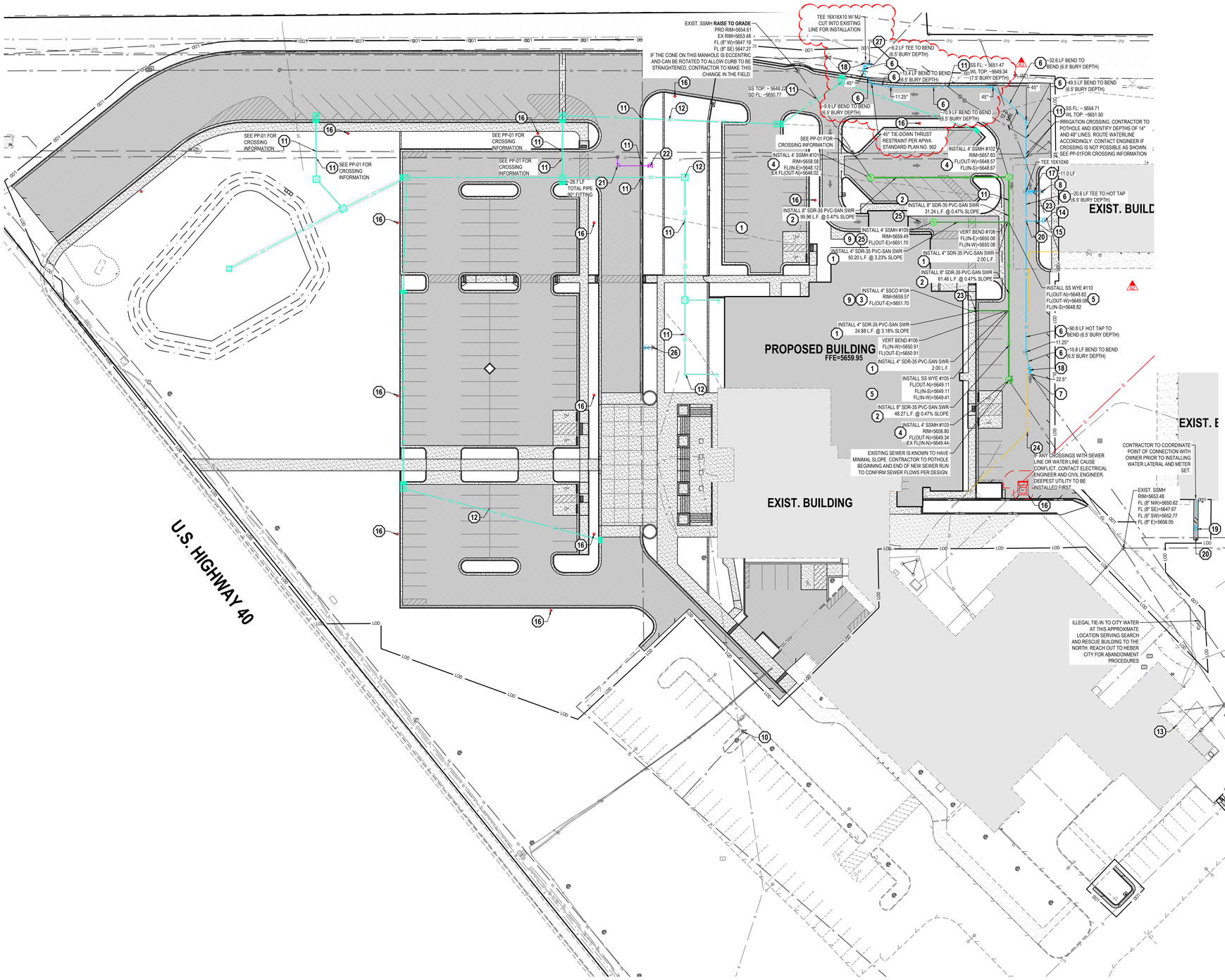

GENERAL NOTES

1. ALL WORK TO COMPLY WITH THE HEBER CITY'S STANDARDS AND SPECIFICATIONS.
2. EXISTING UNDERGROUND UTILITIES AND IMPROVEMENTS ARE SHOWN IN THEIR APPROXIMATE LOCATIONS BASED UPON RECORD INFORMATION AVAILABLE AT THE TIME OF PREPARATION OF THESE PLANS. LOCATIONS MAY NOT HAVE BEEN VERIFIED IN THE FIELD AND NO GUARANTEE IS MADE AS TO THE ACCURACY OR COMPLETENESS OF THE INFORMATION SHOWN. IT SHALL BE THE RESPONSIBILITY OF THE CONTRACTOR TO DETERMINE THE EXISTENCE AND LOCATION OF THE UTILITIES SHOWN ON THESE PLANS OR INDICATED IN THE FIELD BY LOCATING SERVICES. ANY ADDITIONAL COSTS INCURRED AS A RESULT OF THE CONTRACTOR'S FAILURE TO VERIFY THE LOCATIONS OF EXISTING UTILITIES PRIOR TO THE BEGINNING OF CONSTRUCTION IN THEIR VICINITY SHALL BE BORNE BY THE CONTRACTOR AND ASSUMED INCLUDED IN THE CONTRACT. THE CONTRACTOR IS TO VERIFY ALL CONNECTION POINTS WITH THE EXISTING UTILITIES. THE CONTRACTOR IS RESPONSIBLE FOR ANY DAMAGE CAUSED TO THE EXISTING UTILITIES AND UTILITY STRUCTURES THAT ARE TO REMAIN. IF CONFLICTS WITH EXISTING UTILITIES OCCUR, THE CONTRACTOR SHALL NOTIFY THE ENGINEER PRIOR TO CONSTRUCTION TO DETERMINE IF ANY FIELD ADJUSTMENTS SHOULD BE MADE.
3. ALL SANITARY SEWER INFRASTRUCTURE TO BE INSTALLED PER HEBER CITY STANDARD PLANS AND SPECIFICATIONS.
4. ALL WATER INFRASTRUCTURE TO BE INSTALLED PER HEBER CITY OR APWA STANDARD PLANS AND SPECIFICATIONS.
6. DEFLECT OR LOOP ALL WATERLINES TO AVOID CONFLICTS WITH OTHER UTILITIES PER GOVERNING AGENCY'S STANDARDS AND SPECIFICATIONS.
7. PROJECT SHALL COMPLY WITH ALL UTAH DIVISION OF DRINKING WATER RULES AND REGULATIONS INCLUDING, BUT NOT LIMITED TO, THOSE PERTAINING TO BACKFLOW PROTECTION AND CROSS CONNECTION PREVENTION.
8. THE CONTRACTOR IS TO COORDINATE ALL UTILITIES WITH MECHANICAL/PLUMBING PLANS.
9. NOTIFY ENGINEER OF ANY DISCREPANCIES IN DESIGN OR STAKING BEFORE PLACING UTILITY STRUCTURES OR PIPES.
10. THE CONTRACTOR SHALL ADJUST TO GRADE ALL EXISTING UTILITIES AS NEEDED PER LOCAL GOVERNING AGENCY'S STANDARDS AND SPECIFICATIONS.
11. THE CONTRACTOR IS TO PROTECT AND PRESERVE ALL EXISTING IMPROVEMENTS, UTILITIES, AND SIGNS, ETC. UNLESS OTHERWISE NOTED ON THESE PLANS.
12. A NOTICE TO PROCEED MUST BE OBTAINED FROM THE HEBER CITY ENGINEER PRIOR TO DOING ANY WORK ON THE PROJECT.

SCOPE OF WORK:

PROVIDE, INSTALL AND/OR CONSTRUCT THE FOLLOWING PER THE SPECIFICATIONS GIVEN OR REFERENCED, THE DETAILS NOTED, AND/OR AS SHOWN ON THE CONSTRUCTION DRAWINGS:

1. 4" SDR-35 PVC SANITARY SEWER LATERAL, INCLUDING CLEANOUTS AT MAXIMUM 100-FOOT SPACING, PER HEBER CITY'S STANDARDS AND SPECIFICATIONS. INSTALLATION AND TRENCHING PER HEBER CITY STANDARD DETAIL UTIL-1 AND SPECIFICATIONS. LENGTH AND SLOPE PER PLAN.
2. 8" SDR-35 PVC SANITARY SEWER LATERAL OR MATCHING EXISTING LINE MATERIAL PER HEBER CITY'S STANDARDS AND SPECIFICATIONS. INSTALLATION AND TRENCHING PER HEBER CITY STANDARD DETAIL UTIL-1 AND SPECIFICATIONS. LENGTH AND SLOPE PER PLAN.
3. SANITARY SEWER CLEANOUT TO GRADE PER DETAIL 9/C-600.
4. SANITARY SEWER MANHOLE PER HEBER CITY'S STANDARD DETAIL SEWER-5 AND SPECIFICATIONS.
5. CONNECT LATERAL TO 8" MAIN PER HEBER CITY'S STANDARD DETAIL SEWER-1 AND SPECIFICATIONS.
6. 10" POTABLE WATER LINE, INTENT IS TO MATCH EXISTING MATERIAL. FOR PURPOSES OF BIDDING ASSUME C-900 PVC PIPE. INSTALLATION PER HEBER CITY'S STANDARDS AND SPECIFICATIONS. THRUST BLOCKING PER HEBER CITY'S STANDARD DETAIL WATER-2 AND SPECIFICATIONS WITH TRACER WIRE INSTALLED PER HEBER CITY'S STANDARD DETAIL WATER-5, ADDITIONALLY SECURE ALL PIPE BENDS WITH MEGALUG JOINT RESTRAINTS OR APPROVED EQUAL. INSTALLATION AND TRENCHING PER HEBER CITY STANDARD DETAIL UTIL-1 AND SPECIFICATIONS.
7. CONNECT TO EXISTING WATER LINE PER HEBER CITY'S STANDARDS AND SPECIFICATIONS.
8. FIRE HYDRANT ASSEMBLY COMPLETE PER HEBER CITY'S STANDARD DETAIL WATER-1 AND SPECIFICATIONS.
9. SEE PLUMBING PLANS FOR CONTINUATION.
10. EXISTING FIRE HYDRANT.
11. UTILITY CROSSING AS SHOWN ON PLAN. DEFLECT WATER LINES AS REQUIRED PER APWA STANDARD PLAN NO. 542 AND SPECIFICATIONS. INVERTS OF EXISTING UTILITIES HAVE BEEN ESTIMATED BASED ON REFERENCE INFORMATION AVAILABLE DURING DESIGN. CONTRACTOR TO POTHOLE CROSSINGS AND DETERMINE ACTUAL UTILITY DEPTHS PRIOR TO ORDERING MATERIALS.
12. DRAINAGE SYSTEM SHOWN FOR REFERENCE ONLY SEE C-300.
13. EXISTING GAS METER.
14. INSTALL NEW WATER METER PER HEBER CITY'S STANDARD DRAWING WATER-3. SIZE TO MATCH EXISTING.
15. INSTALL NEW WATER LATERAL LINE PER HEBER CITY'S STANDARD DRAWING WATER-3. SIZE AND MATERIAL TO MATCH EXISTING.
16. ELECTRICAL IMPROVEMENTS ARE SHOWN FOR REFERENCE ONLY. INFORMATION SHOWN IS BASED ON WORK COMPLETED BY OTHERS AND IS SUBJECT TO CHANGE. SEE ELECTRICAL DRAWINGS FOR MORE INFORMATION.
17. 6" C-900 PVC POTABLE WATER LINE PER HEBER CITY'S STANDARDS AND SPECIFICATIONS. THRUST BLOCKING PER HEBER CITY'S STANDARD DETAIL WATER-2 AND SPECIFICATIONS WITH TRACER WIRE INSTALLED PER HEBER CITY'S STANDARD DETAIL WATER-5. INSTALLATION AND TRENCHING PER HEBER CITY STANDARD DETAIL UTIL-1 AND SPECIFICATIONS.
18. WATER VALVE AND BOX TO BE INSTALLED PER HEBER CITY'S STANDARD DRAWING WATER-3 AND SPECIFICATIONS.
19. INSTALL 1" WATER SERVICE WITH METER PER HEBER CITY'S STANDARD DRAWINGS WATER-6B AND WATER-4 AND SPECIFICATIONS. INSTALLATION AND TRENCHING PER HEBER CITY STANDARD DETAIL UTIL-1 AND SPECIFICATIONS. CONNECT TO EXISTING SERVICE LINE.
20. HOT TAP POLYETHYLENE TO WATER MAIN VIA SADDLE AND CORP STOP PER HEBER CITY STANDARD DRAWING WATER-6A.
21. 3" IRRIGATION LINE. MATCH EXISTING MATERIALS (ASSUMED TO BE SCH-40 PVC IRRIGATION LINE). INSTALLATION AND TRENCHING PER HEBER CITY STANDARD DETAIL UTIL-1 AND SPECIFICATIONS.
22. IRRIGATION POINT OF CONNECTION. INSTALL 3" IRRIGATION GATE VALVE. SEE LANDSCAPE PLANS FOR MORE INFORMATION
23. STAMP CURB TO INDICATE UTILITY LATERAL CONNECTION PER HEBER CITY STANDARDS AND SPECIFICATIONS.
24. NEW ELECTRICAL/TELECOMMUNICATIONS LINE. SEE ELECTRICAL PLANS FOR DESIGN INFORMATION.
25. SAND/OIL SEPARATOR WITH SAMPLING MANHOLE PER HEBER CITY STANDARDS. SEE MECHANICAL PLANS FOR DETAILS.
26. RELOCATED FIRE HYDRANT TO BE REINSTALLED PER HEBER CITY'S STANDARD DETAIL WATER-1 AND SPECIFICATIONS.
27. INSTALL NEW 16" BUTTERFLY VALVE WITH VALVE BOX PER HEBER CITY'S STANDARD DRAWING WATER-3. CUT INTO EXISTING 16" LINE TO INSTALL VALVE W/ MJ. HEBER CITY TO PROVIDE VALVE.

CITY ENGINEER ACCEPTANCE

Russell Funk — Signature
6/26/2024 — Date

NORTH

HORIZONTAL GRAPHIC SCALE

30 0 15 30 60

(IN FEET)
HORZ: 1 inch = 30 ft.

E D
A

[A] The Boston Building
9 Exchange Place, Suite 1100
Salt Lake City, Utah 84111

[O] 801 531 7600

[E] info@edaarch.com

[W] www.edaarch.com

PROJECT ARCHITECT JB
PROJECT MANAGER SH

LICENSED PROFESSIONAL ENGINEER — Kent Morgan — No. 5567061 — 5-28-2024 — STATE OF UTAH

ENSIGN
THE STANDARD IN ENGINEERING

SANDY
45 W 10000 S, Suite 500
Sandy, UT 84070
Phone: 801.255.0529

WWW.ENSIGNENG.COM

WASATCH COUNTY
COURTS EXPANSION

1361 US-40
HEBER CITY, UTAH 84032

PROJECT NUMBER		223053
#	DESCRIPTION	DATE
	PERMIT REVIEW SET	05.28.24
A2	ADDENDUM #2	06.12.24
A3	ADDENDUM #3	06.17.24

UTILITY
PLAN

C-400

© EDA

BENCHMARK

NORTH QUARTER CORNER OF SECTION 8, TOWNSHIP 4 SOUTH, RANGE 5 EAST SALT LAKE BASE AND MERIDIAN (FOUND BRASS CAP)

ELEV = 5664.36'

811 Know what's below. Call before you dig.

CALL BLUESTAKES @ 811 AT LEAST 48 HOURS PRIOR TO THE COMMENCEMENT OF ANY CONSTRUCTION.

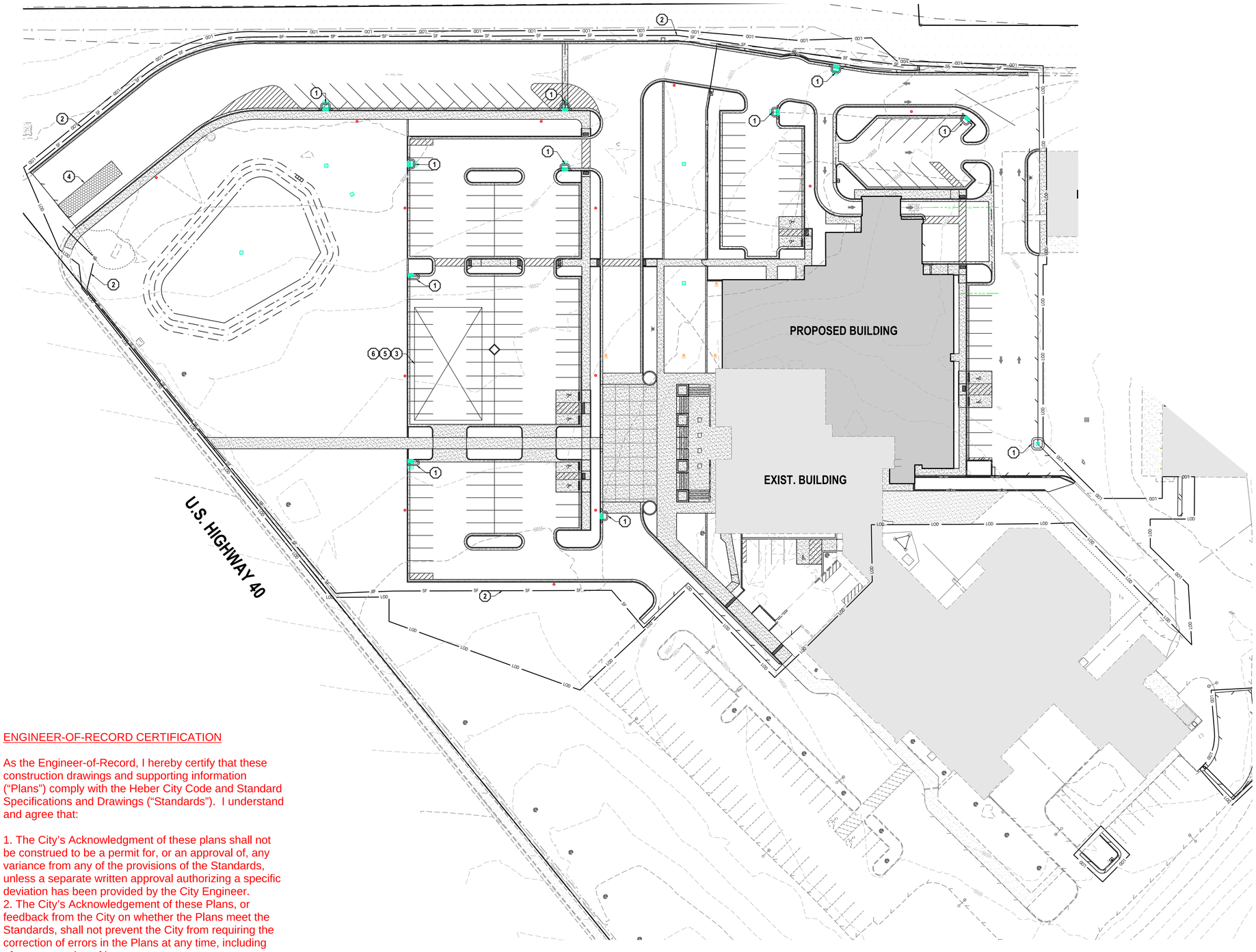

GENERAL NOTES

1. THIS PLAN IS DESIGNED AS A FIRST APPRAISAL OF NECESSARY MEANS TO PROTECT THE WATERS OF THE STATE FROM POTENTIAL POLLUTION. IT IS THE RESPONSIBILITY OF THE OWNER/OPERATOR TO ADD WARRANTED BEST MANAGEMENT PRACTICES (BMP'S) AS NECESSARY, MODIFY THOSE SHOWN AS APPROPRIATE, AND DELETE FROM THE PROJECT THOSE FOUND TO BE UNNECESSARY. FEDERAL AND STATE LAW ALLOWS THESE UPDATES TO BE MADE BY THE OWNER/OPERATOR ONSITE AND RECORDED BY THE OWNER/OPERATOR ON THE COPY OF THE SWPPP KEPT ONSITE.
2. DISTURBED LAND SHALL BE KEPT TO A MINIMUM. STABILIZATION MEASURES SHALL BE INITIATED AS SOON AS PRACTICABLE IN PORTIONS OF THE SITE WHERE CONSTRUCTION ACTIVITIES HAVE TEMPORARILY OR PERMANENTLY CEASED, BUT IN NO CASE MORE THAN 14 DAYS AFTER THE CONSTRUCTION ACTIVITY IN THAT PORTION OF THE SITE HAS TEMPORARILY OR PERMANENTLY CEASED. HOWEVER, WHERE CONSTRUCTION ACTIVITY ON A PORTION OF THE SITE IS TEMPORARILY CEASED, AND EARTH DISTURBING ACTIVITIES WILL BE RESUMED WITHIN 21 DAYS, TEMPORARY STABILIZATION MEASURES DO NOT HAVE TO BE INITIATED ON THAT PORTION OF THE SITE.
3. RESEED DISTURBED LAND WITH NATIVE GRASS MIXTURE WITHIN 14 CALENDAR DAYS OF ACHIEVEMENT OF FINISH GRADE TO STABILIZE SOILS IF LAND IS NOT TO BE RE-WORKED WITHIN 14 CALENDAR DAYS OF THE CESSATION OF CONSTRUCTION ACTIVITIES AT THAT LOCATION.
4. DETAILS SHOWN ARE TO BE EMPLOYED TO PROTECT RUNOFF AS APPROPRIATE DURING CONSTRUCTION. NOT ALL DETAILS ARE NECESSARY AT ALL PHASES OF THE PROJECT. IT SHALL BE THE RESPONSIBILITY OF THE OWNER/OPERATOR TO USE APPROPRIATE BEST MANAGEMENT PRACTICES AT THE APPROPRIATE PHASE OF CONSTRUCTION. SEE SWPPP FOR BMP IMPLEMENTATION SCHEDULE.
5. VARIOUS BEST MANAGEMENT PRACTICES HAVE BEEN SHOWN ON THE PLANS AT SUGGESTED LOCATIONS. THE CONTRACTOR MAY MOVE AND RECONFIGURE THESE BMP'S TO OTHER LOCATIONS IF PREFERRED, PROVIDED THE INTENT OF THE DESIGN IS PRESERVED.
6. NOT ALL POSSIBLE BMP'S HAVE BEEN SHOWN. THE CONTRACTOR IS RESPONSIBLE TO APPLY CORRECT MEASURES TO PREVENT THE POLLUTION OF STORM WATER PER PROJECT SWPPP.
7. A UPDES (UTAH POLLUTANT DISCHARGE ELIMINATION SYSTEM) PERMIT IS REQUIRED FOR ALL CONSTRUCTION ACTIVITIES 1 ACRE OR MORE.

SCOPE OF WORK:

PROVIDE, INSTALL AND/OR CONSTRUCT THE FOLLOWING PER THE SPECIFICATIONS GIVEN OR REFERENCED, THE DETAILS NOTED, AND/OR AS SHOWN ON THE CONSTRUCTION DRAWINGS:

1. INLET PROTECTION PER DETAIL 4/C-600.
2. SILT FENCE PER DETAIL 5/C-600.
3. PORTABLE TOILET PER DETAIL 6/C-600.
4. VEHICLE WASHDOWN AND STABILIZED CONSTRUCTION ENTRANCE PER DETAIL 7/C-600.
5. SUGGESTED TEMPORARY CONSTRUCTION SITE PARKING, STAGING, DUMPSTER, AND MATERIAL STORAGE AREA.
6. SUGGESTED STOCKPILE AREA.

REVISION SCHEDULE

NUMBER	DATE	AUTHOR	COMPANY REPRESENTATIVE SIGNATURE
1			
2			
3			
4			
5			
6			
7			
8			
9			
10			
11			
12			

ENGINEER-OF-RECORD CERTIFICATION

As the Engineer-of-Record, I hereby certify that these construction drawings and supporting information ("Plans") comply with the Heber City Code and Standard Specifications and Drawings ("Standards"). I understand and agree that:

1. The City's Acknowledgment of these plans shall not be construed to be a permit for, or an approval of, any variance from any of the provisions of the Standards, unless a separate written approval authorizing a specific deviation has been provided by the City Engineer.
2. The City's Acknowledgement of these Plans, or feedback from the City on whether the Plans meet the Standards, shall not prevent the City from requiring the correction of errors in the Plans at any time, including after construction of improvements.
3. The City's Acknowledgement of these Plans does not constitute a permit from the Federal or State Government or permission to deviate from Federal or State Laws or Regulations.
4. The City's Acknowledgement of these Plans does not grant permission to work on the properties of others.

E D
A

[A] The Boston Building
9 Exchange Place, Suite 1100
Salt Lake City, Utah 84111

[O] 801 531 7600

[E] info@edaarch.com

[W] www.edaarch.com

PROJECT ARCHITECT JB
PROJECT MANAGER SH

LICENSED PROFESSIONAL ENGINEER
Kevin Morgan
No. 5567061
5-28-2024
STATE OF UTAH

ENSIGN
THE STANDARD IN ENGINEERING

SANDY
45 W 10000 S, Suite 500
Sandy, UT 84070
Phone: 801.255.0529

WWW.ENSIGNENG.COM

WASATCH COUNTY
COURTS EXPANSION

1361 US-40
HEBER CITY, UTAH 84032

PROJECT NUMBER 223053

#	DESCRIPTION	DATE
	PERMIT REVIEW SET	05.28.24
1	ADDENDUM #2	06.12.24

CITY ENGINEER ACCEPTANCE

Russell Funk — Signature
6/26/2024 — Date

NORTH

HORIZONTAL GRAPHIC SCALE
30 0 15 30 60
(IN FEET)
HORZ: 1 inch = 30 ft.

EROSION
CONTROL
PLAN

C-500

© EDA

CONCRETE NOTES

1. ALL PAVING TO BE PLACED OVER PROPERLY PREPARED NATURAL SOILS AND/OR PROPERLY PREPARED EXISTING FILL SOILS AND PROPERLY COMPACTED STRUCTURAL FILL WHERE SPECIFIED.
2. ALL STRUCTURAL FILL TO BE PLACED AND COMPACTED PER THE PROJECT GEOTECHNICAL REPORT OR TO A MINIMUM OF 95% OF THE MAXIMUM DRY DENSITY AS DETERMINED BY THE AASHTO T-180 (D-1557) METHOD OF COMPACTION. LIFTS SHOULD BE PLACED PER GEOTECHNICAL RECOMMENDATIONS BUT SHOULD NOT EXCEED 8" IN LOOSE THICKNESS.
3. REMOVE SURFACE VEGETATION AND OTHER DELETERIOUS MATERIALS OVER THE ENTIRE SITE IN PREPARATION OF PROPOSED IMPROVEMENTS.

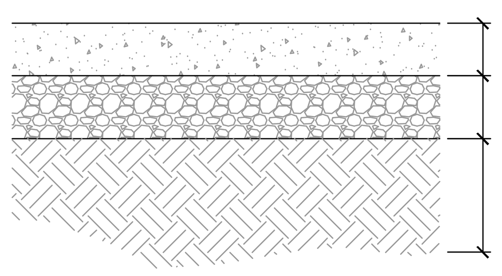

IN INSTANCES WHERE THERE IS A CONFLICT BETWEEN PAVEMENT RECOMMENDATIONS IN THE GEOTECHNICAL REPORT (AND APPLICABLE ADDENDA) AND PAVEMENT RECOMMENDATIONS ON THESE PLANS, THE THICKER OF THE TWO PAVEMENT SECTIONS SHALL GOVERN.

1 CONCRETE PAVEMENT SECTION

SCALE: NONE

ASPHALT NOTES

1. ALL PAVING TO BE PLACED OVER PROPERLY PREPARED NATURAL SOILS AND/OR PROPERLY PREPARED EXISTING FILL SOILS AND PROPERLY COMPACTED STRUCTURAL FILL WHERE SPECIFIED.
2. ALL STRUCTURAL FILL TO BE COMPACTED TO A MINIMUM OF 95% OF THE MAXIMUM DRY DENSITY AS DETERMINED BY THE AASHTO T-180 (D-1557) METHOD OF COMPACTION. LIFTS SHOULD NOT EXCEED 8" IN LOOSE THICKNESS.
3. REMOVE SURFACE VEGETATION AND OTHER DELETRIOUS MATERIALS OVER THE ENTIRE SITE IN PREPARATION OF PROPOSED IMPROVEMENTS.

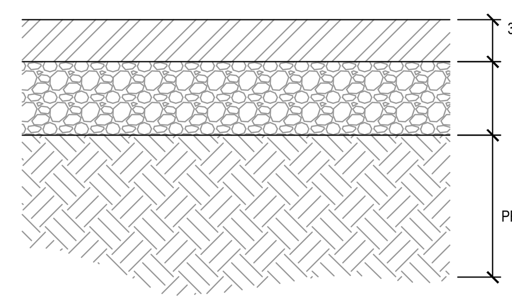

IN INSTANCES WHERE THERE IS A CONFLICT BETWEEN PAVEMENT RECOMMENDATIONS IN THE GEOTECHNICAL REPORT (AND APPLICABLE ADDENDA) AND PAVEMENT RECOMMENDATIONS ON THESE PLANS, THE THICKER OF THE TWO PAVEMENT SECTIONS SHALL GOVERN.

2 ASPHALT SECTION

SCALE: NONE

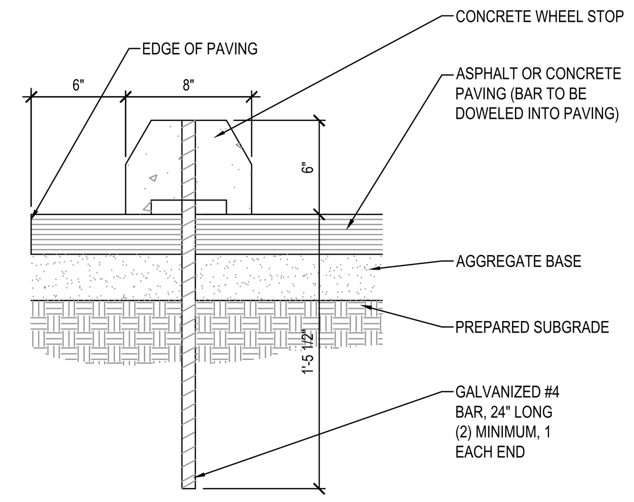

3 CONCRETE WHEEL STOP

SCALE: NONE

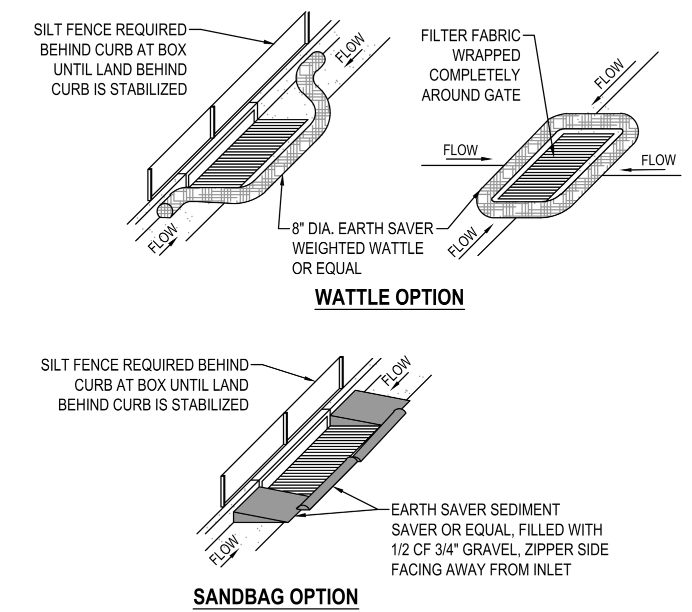

NOTES:

1. PLACE WATTLES OR GRAVEL BAGS TIGHT AGAINST CURB TO PREVENT SEDIMENT-LADEN WATER FROM GETTING BETWEEN CURB AND WATTLE/BAG.
2. PLACE WATTLES OR GRAVEL BAGS SUCH THAT FLOW DOES NOT OVERTOP CURB OR ROAD CENTERLINE.
3. INSPECT INLET PROTECTION AFTER EVERY LARGE STORM EVENT AND AT LEAST BI-WEEKLY, OR PER SWPPP REQUIREMENTS, WHICHEVER IS MORE STRINGENT, TO ENSURE THAT SEDIMENT CONTROL IS MEETING ITS DESIGN INTENT. MAINTAIN AND/OR REPLACE AS NEEDED.
4. REMOVE SEDIMENT ACCUMULATED WHEN IT REACHES 50% OF GRAVEL BAG OR WATTLE HEIGHT.
5. CONTRACTOR MAY SUBMIT AN ALTERNATIVE METHOD OF INLET PROTECTION. THE ALTERNATIVE METHOD SHALL BE APPROVED BY THE CITY INSPECTOR AND THE ENGINEER OF RECORD.
6. BEFORE PLACEMENT OF CURB, STABILIZATION OF LAND BEHIND CURB, AND/OR PAVING, MAINTAIN TOP OF INLET AT 6" ABOVE GRADE, AND SURROUND WITH SILT FENCE FOR SEDIMENTATION AROUND BOX. MAINTAIN SILT FENCE BEHIND BOX UNTIL LAND BEHIND CURB IS STABILIZED.

4 SAG INLET PROTECTION

SCALE: NONE

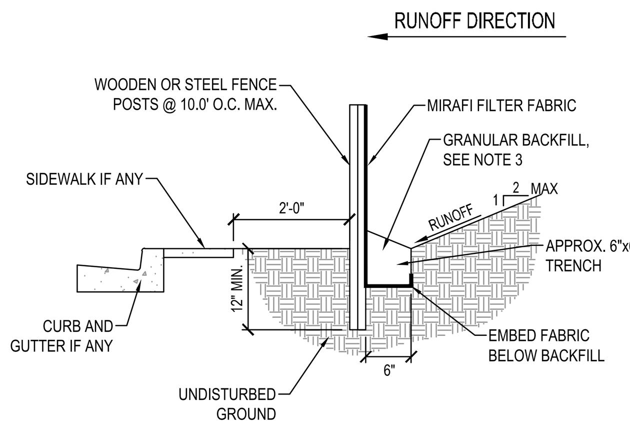

NOTES:

1. EXCAVATE 6"x6" TRENCH ALONG LIMITS OF DISTURBANCE AS SHOWN ON CONSTRUCTION DRAWINGS.
2. POSTS SHALL BE POSITIONED ON DOWNSTREAM SIDE OF FENCE.
3. LAY TOE-IN FABRIC FLAP IN BOTTOM OF TRENCH. BACKFILL TRENCH WITH FREE DRAINING GRANULAR MATERIAL. COMPACT TRENCH TO SATISFACTION OF THE ENGINEER OF RECORD.
4. SILT FENCE GEOTEXTILE SHALL MEET AASHTO M288-92 REQUIREMENTS.
5. REMOVE & DISPOSE OF SEDIMENT WHEN ACCUMULATION IS 50% OF EXPOSED FENCE HEIGHT.
6. 10' MAX. SPACING BETWEEN STAKES.
7. SILT FENCES SHALL BE INSTALLED ALONG CONTOURS, NOT UP AND DOWN SLOPES, WITH 10' OVERLAP AT BREAKS.

5 TEMPORARY SILT FENCE

SCALE: NONE

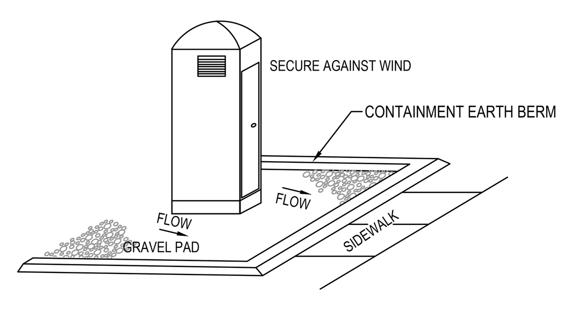

6 PORTABLE TOILET

SCALE: NONE

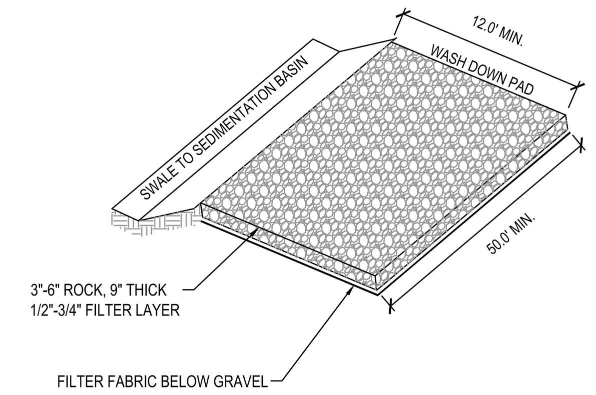

NOTE:

1. PLACE SIGN ADJACENT TO ENTRANCE " CONSTRUCTION TRAFFIC ONLY - ALL CONSTRUCTION TRAFFIC SHALL ENTER AND EXIT SITE AT THIS LOCATION"

7 STABILIZED CONSTRUCTION ENTRANCE

SCALE: NONE

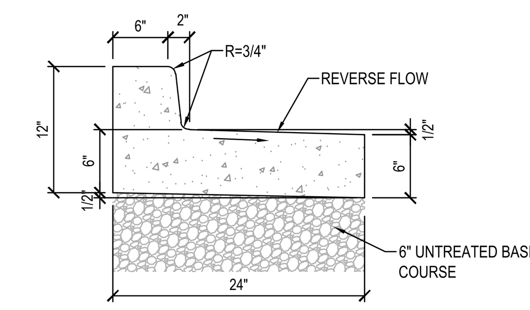

NOTE:

1. CONSTRUCT PER NOTES AND SPECIFICATIONS ASSOCIATED WITH APWA STANDARD PLAN NO. 205.

8 24" REVERSE PAN CURB AND GUTTER

SCALE: NONE

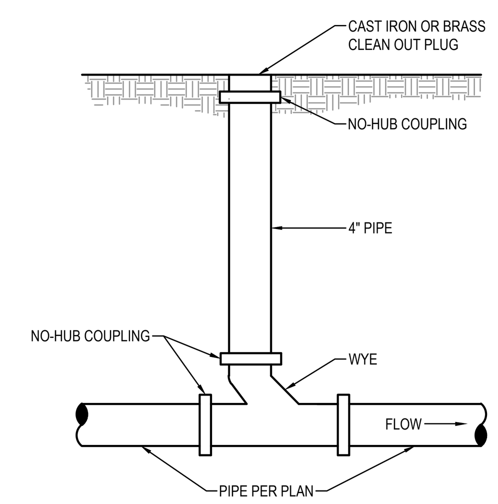

9 CLEAN-OUT TO GRADE

SCALE: NONE

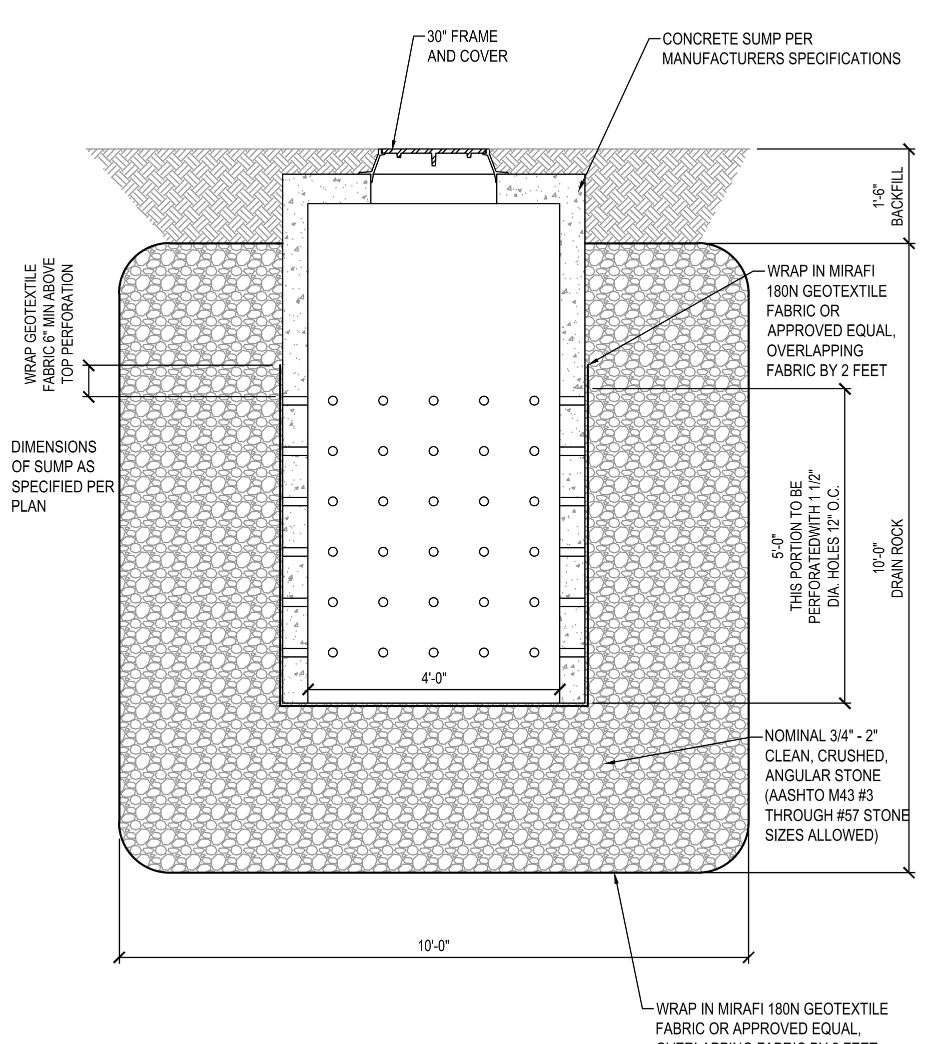

13 SUMP

SCALE: NONE

V1600-3 V1610-3 Assembly

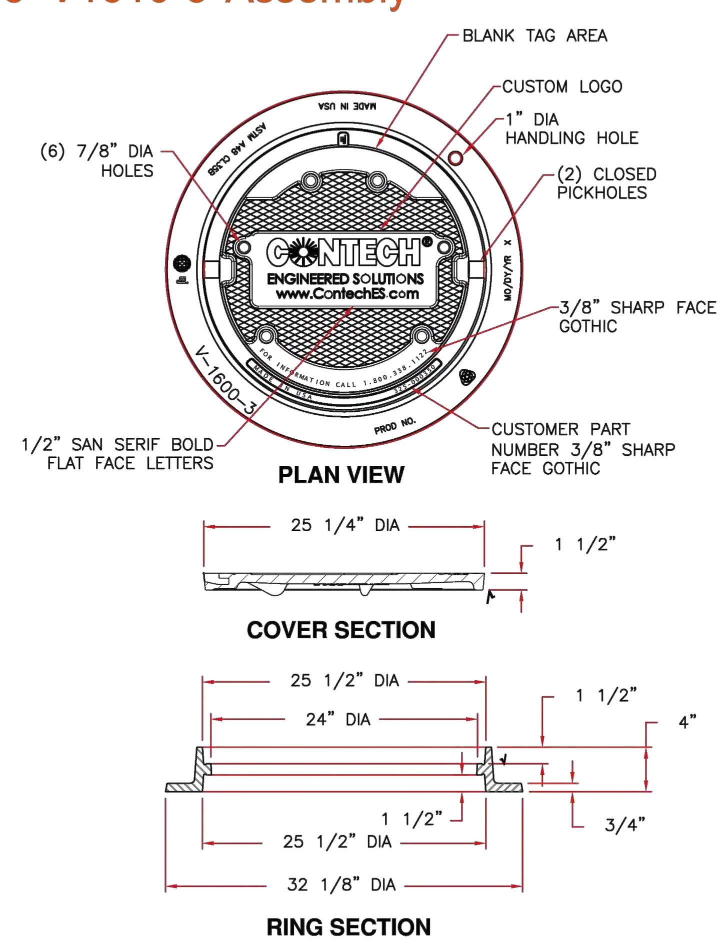

Product Number
41600389
Design Features
-Materials
Frame
Gray Iron (CL35B)
Cover
Gray Iron (CL35B)

-Design Load
Heavy Duty
-Open Area
n/a
-Coating
Undipped
-√ Designates Machined Surface

Certification
-
- ASTM A48
-
-Country of Origin: USA

Major Components
41600310
41600374

Drawing Revision
05/02/2008 Designer: DEW
6/20/2017 Revised By: DAE

Disclaimer
Weights (lbs./kg) dimensions (inches/mm) and drawings provided for your guidance. We reserve the right to modify specifications without prior notice.
CONFIDENTIAL: This drawing is the property of EJ GROUP, Inc., and embodies confidential information, registered marks, patents, trade secret information, and/or know how that is the property of EJ GROUP, Inc. Copyright © 2012 EJ GROUP, Inc. All rights reserved.

Contact
800 626 4653
ejco.com

V1610-2BF RG V1610-2CV Assembly

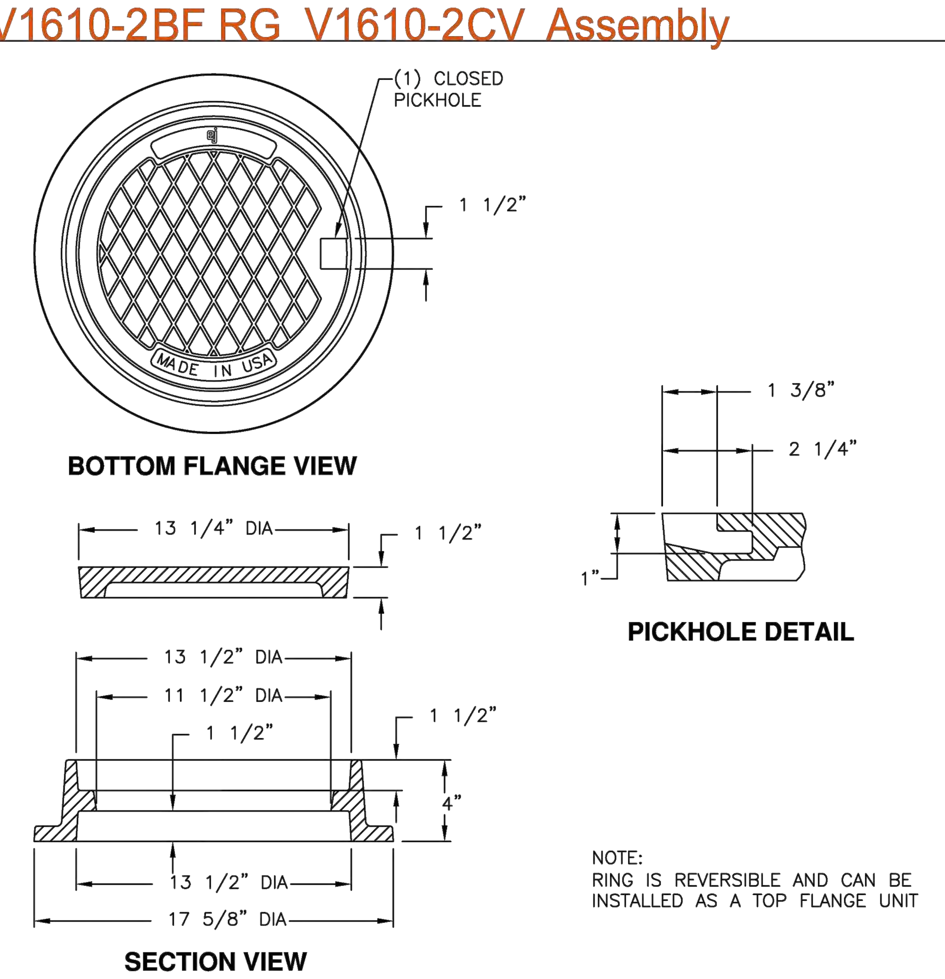

NOTE:
RING IS REVERSIBLE AND CAN BE INSTALLED AS A TOP FLANGE UNIT

Product Number
41610201
Design Features
-Materials
Cleanout/Monument Box Frame
Gray Iron (CL35B)
Cleanout/Monument Box Cover
Gray Iron (CL35B)

-Design Load
Heavy Duty
-Open Area
n/a
-Coating
Undipped
-√ Designates Machined Surface

Certification
- ASTM A48
-
-
-Country of Origin: USA

Major Components
41610210
41610220

Drawing Revision
06/12/2003 Designer: DAL
09/09/2015 Revised By: DVD

Disclaimer
Weights (lbs./kg) dimensions (inches/mm) and drawings provided for your guidance. We reserve the right to modify specifications without prior notice.
CONFIDENTIAL: This drawing is the property of EJ GROUP, Inc., and embodies confidential information, registered marks, patents, trade secret information, and/or know how that is the property of EJ GROUP, Inc. Copyright © 2012 EJ GROUP, Inc. All rights reserved.

Contact
800 626 4653
ejco.com

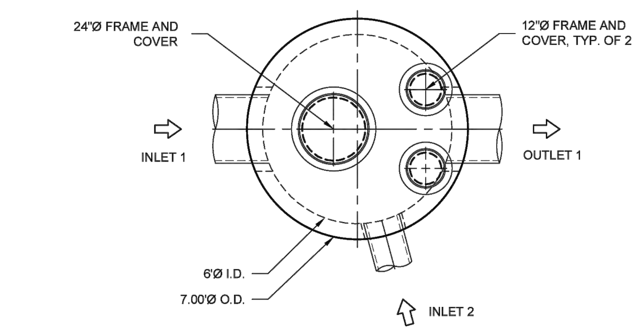

PLAN VIEW
INTERNALS NOT SHOWN

INTERNAL COMPONENTS TO BE INSTALLED ON SITE BY CONTECH FIELD CONSULTANT. PLEASE CONTACT CONTECH FOR CURRENT INSTALLATION LEAD TIME

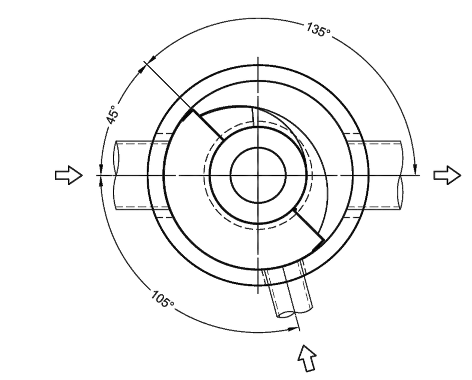

PLAN VIEW FOR PIPE ORIENTATION
TOP SLAB NOT SHOWN

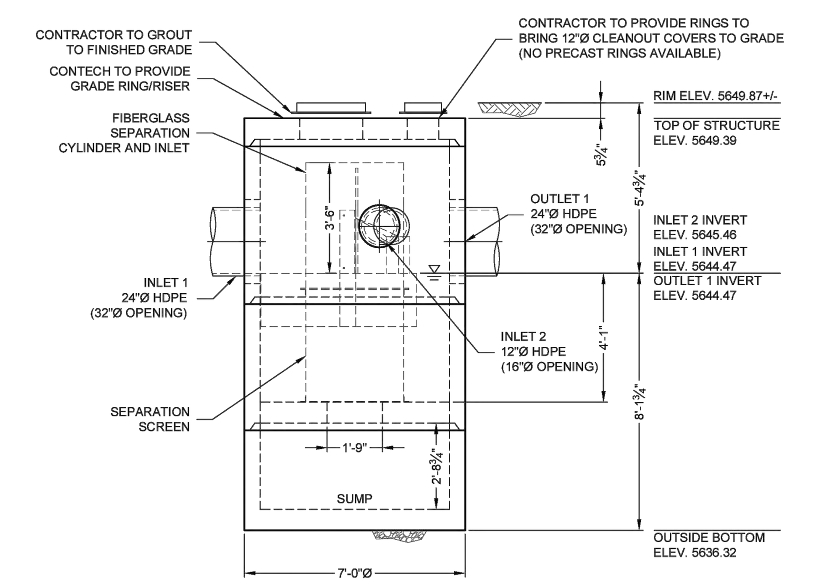

ELEVATION VIEW

MATERIAL LIST (PROVIDED BY CONTECH)

COUNT	DESCRIPTION	INSTALLED BY
1	3035-6 CONCENTRIC FIBERGLASS INSERT	CONTRACTOR
1	3035, 2400 micron, 3.1' O.D. x 3.58' SCREEN, GREEN FLANGE UP	CONTRACTOR
1	20, 30, 40 SERIES HARDWARE KIT	CONTRACTOR
1	SEALANT FOR JOINTS	CONTRACTOR
1 PLC	GRADE RINGS/RISERS	CONTRACTOR
1	24"Ø X 4" FRAME AND COVER, EJ #41600389, OR EQUIV.	CONTRACTOR
2	12"Ø X 4" FRAME AND COVER, EJ #41610201, OR EQUIV.	CONTRACTOR

SITE DESIGN DATA

WATER QUALITY FLOW RATE	3.86 CFS
PEAK FLOW RATE	12.95 CFS
RETURN PERIOD OF PEAK FLOW	100 YRS

GENERAL NOTES
1. CONTECH TO PROVIDE ALL MATERIALS UNLESS NOTED OTHERWISE.
2. FOR FABRICATION DRAWINGS WITH DETAILED STRUCTURE DIMENSIONS AND WEIGHT, PLEASE CONTACT YOUR CONTECH ENGINEERED SOLUTIONS LLC REPRESENTATIVE. www.ContechES.com
3. CDS WATER QUALITY STRUCTURE SHALL BE IN ACCORDANCE WITH ALL DESIGN DATA AND INFORMATION CONTAINED IN THIS DRAWING. CONTRACTOR TO CONFIRM STRUCTURE MEETS REQUIREMENTS OF PROJECT.
4. STRUCTURE SHALL MEET AASHTO HS-20 LOAD RATING, ASSUMING EARTH COVER OF 0' - 2', AND GROUNDWATER ELEVATION AT, OR BELOW, THE OUTLET PIPE INVERT ELEVATION. ENGINEER OF RECORD TO CONFIRM ACTUAL GROUNDWATER ELEVATION. CASTINGS SHALL MEET AASHTO M306 AND BE CAST WITH THE CONTECH LOGO.
5. IF REQUIRED, PVC HYDRAULIC SHEAR PLATE IS PLACED ON SHELF AT BOTTOM OF SCREEN CYLINDER. REMOVE AND REPLACE AS NECESSARY DURING MAINTENANCE CLEANING.
6. CDS STRUCTURE SHALL BE PRECAST CONCRETE CONFORMING TO ASTM C-478 AND AASHTO LOAD FACTOR DESIGN METHOD.

INSTALLATION NOTES
A. ANY SUB-BASE, BACKFILL DEPTH, AND/OR ANTI-FLOTATION PROVISIONS ARE SITE-SPECIFIC DESIGN CONSIDERATIONS AND SHALL BE SPECIFIED BY ENGINEER OF RECORD.
B. CONTRACTOR TO PROVIDE EQUIPMENT WITH SUFFICIENT LIFTING AND REACH CAPACITY TO LIFT AND SET THE CDS MANHOLE STRUCTURE.
C. CONTRACTOR TO INSTALL JOINT SEALANT BETWEEN ALL STRUCTURE SECTIONS AND ASSEMBLE STRUCTURE.
D. CONTRACTOR TO PROVIDE, INSTALL, AND GROUT INLET AND OUTLET PIPE(S). MATCH PIPE INVERTS WITH ELEVATIONS SHOWN. ALL PIPE CENTERLINES TO MATCH PIPE OPENING CENTERLINES.
E. CONTRACTOR TO TAKE APPROPRIATE MEASURES TO ASSURE UNIT IS WATER TIGHT, HOLDING WATER TO FLOWLINE INVERT MINIMUM. IT IS SUGGESTED THAT ALL JOINTS BELOW PIPE INVERTS ARE GROUTED.

STRUCTURE WEIGHT
APPROXIMATE HEAVIEST PICK = 9500 LBS.
STRUCTURE IS DELIVERED IN 4 PIECES

MAX FOOTPRINT = 7.00'Ø

CONTECH **PROPOSAL** DRAWING

OCOG
LAYOUT 1A

CDS3035-6-C - 807007-10
WASATCH COUNTY COURTS EXPANSION
HEBER CITY, UT
SITE DESIGNATION: SEPERATOR

CONTECH ENGINEERED SOLUTIONS LLC
www.ContechES.com

DATE: 6/7/24	
DESIGNED: BCH	DRAWN: BCH
CHECKED: BCH	APPROVED: BCH
PROJECT No.: 807007	SEQUENCE No.: 10
SHEET: 1 OF 1	

MARK | DATE | REVISION DESCRIPTION | BY

I:\MERLIN\PROJECTACTIVE\807000\807007\807007-10-CDS\DRAWINGS\807007-10-CDS3035-6-C-CONFAB.DWG 6/7/2024 10:22 AM

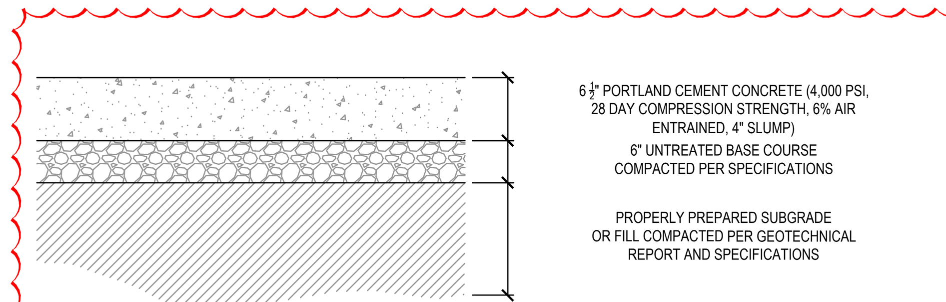

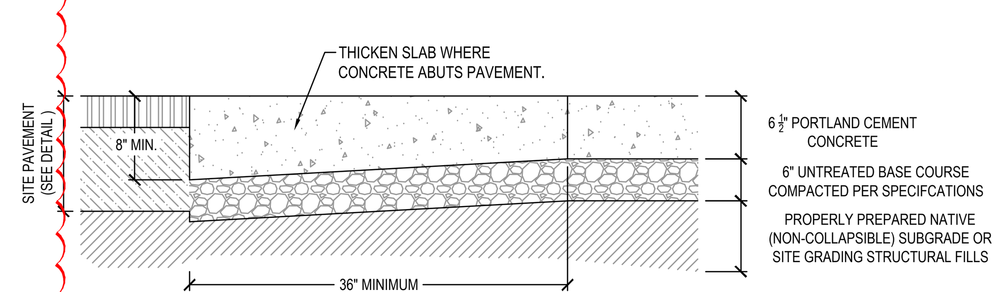

15 DUMPSTER PAD / APRON SECTION

SCALE: NONE

ENGINEER-OF-RECORD CERTIFICATION

As the Engineer-of-Record, I hereby certify that these construction drawings and supporting information (“Plans”) comply with the Heber City Code and Standard Specifications and Drawings (“Standards”). I understand and agree that:

1. The City’s Acknowledgment of these plans shall not be construed to be a permit for, or an approval of, any variance from any of the provisions of the Standards, unless a separate written approval authorizing a specific deviation has been provided by the City Engineer.
2. The City’s Acknowledgement of these Plans, or feedback from the City on whether the Plans meet the Standards, shall not prevent the City from requiring the correction of errors in the Plans at any time, including after construction of improvements.
3. The City’s Acknowledgement of these Plans does not constitute a permit from the Federal or State Government or permission to deviate from Federal or State Laws or Regulations.
4. The City’s Acknowledgement of these Plans does not grant permission to work on the properties of others.

CITY ENGINEER ACCEPTANCE

Signature	Date
Russell Funk	6/26/2024

E D A

[A] The Boston Building
9 Exchange Place, Suite 1100
Salt Lake City, Utah 84111
[O] 801 531 7600
[E] info@edaarch.com
[W] www.edaarch.com

PROJECT ARCHITECT JB
PROJECT MANAGER SH

ENSIGN
THE STANDARD IN ENGINEERING

SANDY
45 W 10000 S, Suite 500
Sandy, UT 84070
Phone: 801.255.0529
WWW.ENSIGNENG.COM

WASATCH COUNTY
COURTS EXPANSION

1361 US-40
HEBER CITY, UTAH 84032

PROJECT NUMBER 223053

#	DESCRIPTION	DATE
	PERMIT REVIEW SET	05.28.24
A2	ADDENDUM #2	06.12.24

DETAILS

C-600

© EDA

BENCHMARK

NORTH QUARTER CORNER OF SECTION 8, TOWNSHIP 4 SOUTH, RANGE 5 EAST SALT LAKE BASE AND MERIDIAN (FOUND BRASS CAP)

ELEV = 5664.36'

811 Know what's below. Call before you dig.

CALL BLUESTAKES @ 811 AT LEAST 48 HOURS PRIOR TO THE COMMENCEMENT OF ANY CONSTRUCTION.

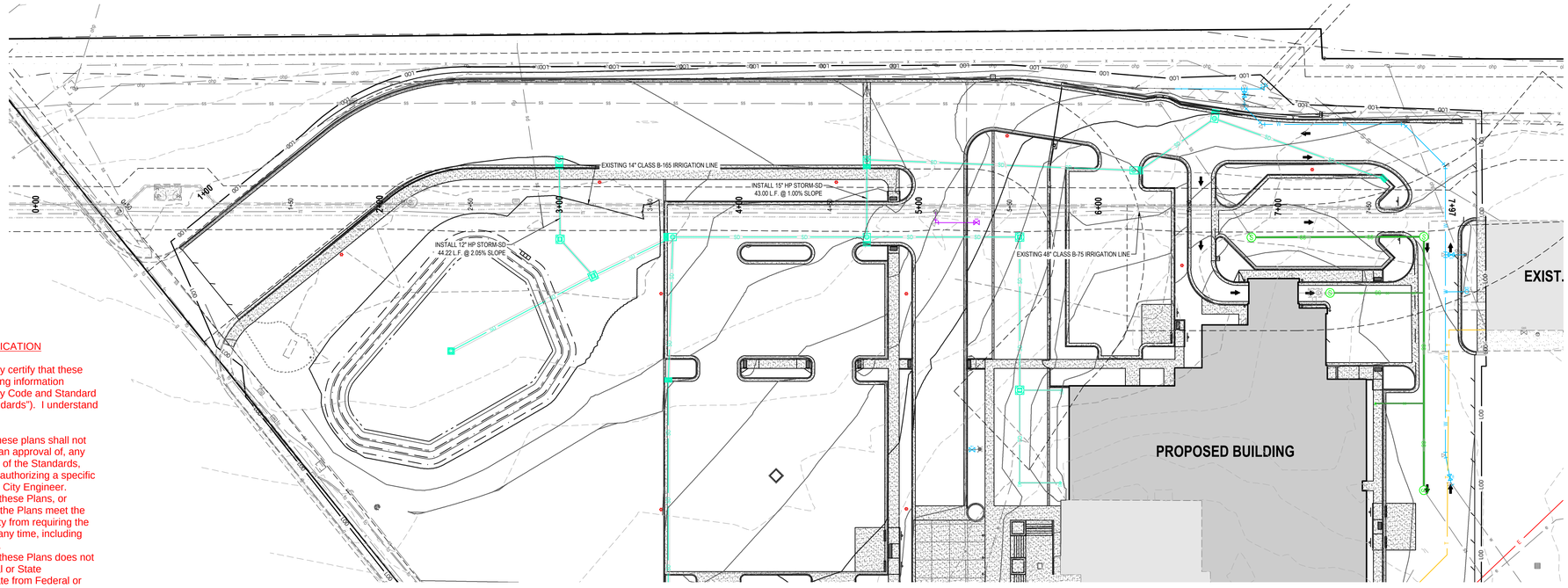

ENGINEER-OF-RECORD CERTIFICATION

As the Engineer-of-Record, I hereby certify that these construction drawings and supporting information ("Plans") comply with the Heber City Code and Standard Specifications and Drawings ("Standards"). I understand and agree that:

1. The City's Acknowledgment of these plans shall not be construed to be a permit for, or an approval of, any variance from any of the provisions of the Standards, unless a separate written approval authorizing a specific deviation has been provided by the City Engineer.
2. The City's Acknowledgement of these Plans, or feedback from the City on whether the Plans meet the Standards, shall not prevent the City from requiring the correction of errors in the Plans at any time, including after construction of improvements.
3. The City's Acknowledgement of these Plans does not constitute a permit from the Federal or State Government or permission to deviate from Federal or State Laws or Regulations.
4. The City's Acknowledgement of these Plans does not grant permission to work on the properties of others.

EXISTING 14" AND 48" IRRIGATION LINES - CENTRAL UTAH WATER CONSERVANCY DISTRICT

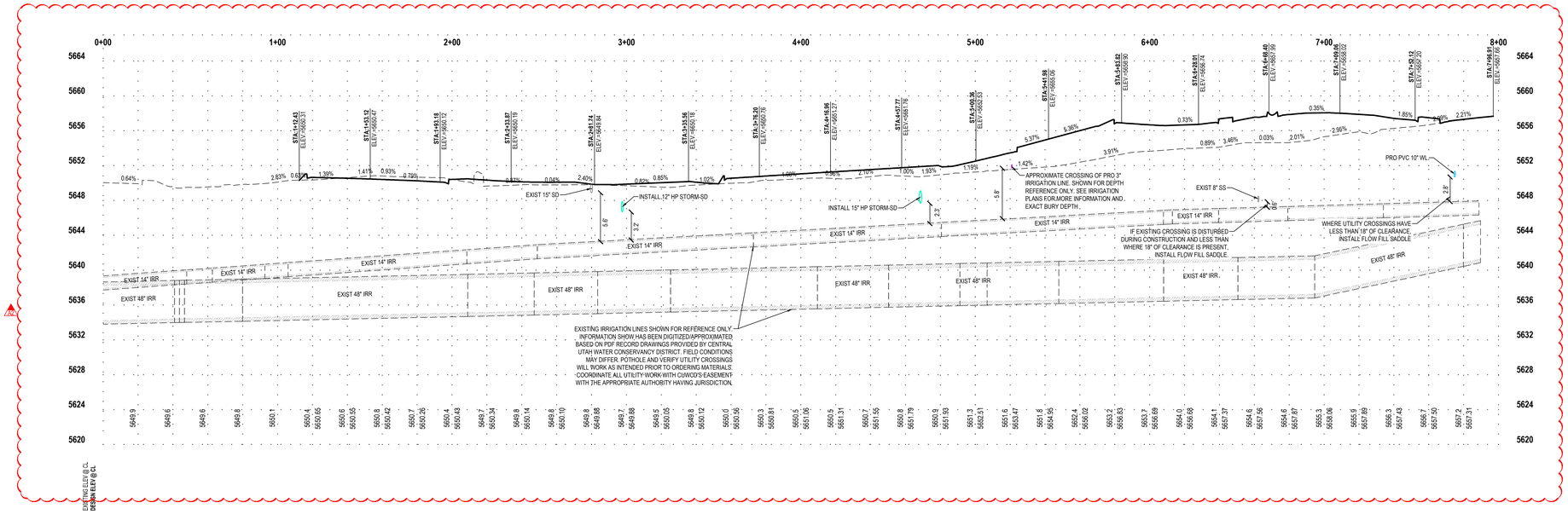

HORIZONTAL GRAPHIC SCALE

30 0 15 30 60

(IN FEET)
HORZ: 1 inch = 30 ft.
VERT: 1 inch = 4 ft.

E D
A

[A] The Boston Building
9 Exchange Place, Suite 1100
Salt Lake City, Utah 84111

[O] 801 531 7600

[E] info@edaarch.com

[W] www.edaarch.com

PROJECT ARCHITECT	JB
PROJECT MANAGER	SH

LICENSED PROFESSIONAL ENGINEER
Kevin Morgan
No. 5567061
5-28-2024
STATE OF UTAH

ENSIGN
THE STANDARD IN ENGINEERING

SANDY
45 W 10000 S, Suite 500
Sandy, UT 84070
Phone: 801.255.0529

WWW.ENSIGNENG.COM

WASATCH COUNTY
COURTS EXPANSION

1361 US-40
HEBER CITY, UTAH 84032

PROJECT NUMBER	223053
# DESCRIPTION	DATE
PERMIT REVIEW SET	05.28.24
1 ADDENDUM #2	06.12.24

CITY ENGINEER ACCEPTANCE

Russell Funk — Signature
6/26/2024 — Date

PLAN AND PROFILE

PP-01

© EDA

LANDSCAPE SCHEDULE (C)

SYMBOL	BOTANICAL / COMMON NAME	CONT	CAL	QTY
TREES				
	Acer freemanii 'Autumn Blaze' / Autumn Blaze Maple	B & B	3"Cal	6
	Gleditsia triacanthos inermis 'Shademaster' TM / Shademaster Locust	B & B	2"Cal	8
	Malus hybrid 'Spring Snow' / Spring Snow Crab	B & B	2"Cal	17
	Malus x 'Radiant' / Radiant Crab Apple	B & B	2"Cal	1
	Ulmus x hollandica 'Pioneer' / Pioneer Elm	B & B	3"Cal	5
	Zelkova serrata 'Green Vase' / Sawleaf Zelkova	B & B	3"Cal	4

SYMBOL	BOTANICAL / COMMON NAME	SIZE	FIELD2	QTY
SHRUBS				
bud	Buddleja x 'SMNBDL' TM / Pugster Amethyst Butterfly Bush	5 gal		30
car	Caryopteris x clandonensis 'Blue Mist' / Blue Mist Shrub	5 gal		8
for	Forsythia x 'Courtasol' TM / Gold Tide Forsythia	5 gal		13
jun	Juniperus sabina 'Arcadia' / Arcadia Juniper	5 gal		19
jun2	Juniperus sabina 'Broadmoor' / Broadmoor Juniper	5 gal		10
mag	Mahonia aquifolium 'Compacta' / Compact Oregon Grape	5 gal		42
pm	Pinus sylvestris 'Hillside Creeper' / Hillside Creeper Scotch Pine	5 gal		25
prb	Prunus besseyi / Sand Cherry	5 gal		16
pun	Prunus besseyi 'Pawnee Buttes' / Sand Cherry	5 gal		11
rhug	Rhus aromatica 'Gro-Low' / Gro-Low Fragrant Sumac	5 gal		67
rib	Ribes alpinum / Alpine Currant	5 gal		33
syr	Syringa x 'SMSJBPT' TM / Bloomerang Dark Purple Lilac	5 gal		6
GRASSES				
	Calamagrostis acutifolia 'Karl Foerster' / Foerster's Reed Grass	5 gal		83
	Calamagrostis x acutiflora 'Overdam' / Overdam Feather Reed Grass	5 gal		28
	Pennisetum alopecuroides 'Hameln' / Hamln Dwarf Fountain Grass	5 gal		37
	Schizachyrium scoparium / Little Bluestem	5 gal		31
PERENNIALS				
ir	Iris pallida 'Albo-variegata' / Sweet Iris	1 gal		7
m	Mahonia repens / Creeping Mahonia	1 gal		17
ru	Rudbeckia fulgida 'Goldsturm' / Goldsturm Black-eyed Susan	1 gal		7
sa	Salvia superba 'May Knight' / Perennial Sage	1 gal		18

SYMBOL	BOTANICAL / COMMON NAME	CONT	FIELD2	QTY
GROUND COVERS				
	Annuals / Annuals	flat @		135 sf
	Turf Sod BioNative / BioNative	sod		41,886 sf (2)
	Turf-Grass / Turf-Grass	sod		7,054 sf

* QUANTITY INFORMATION PROVIDED FOR REFERENCE ONLY. CONTRACTOR RESPONSIBLE TO VERIFY ALL QUANTITIES.

LANDSCAPE NOTES (A)

1. CONTRACTOR SHALL BE RESPONSIBLE FOR MAKING HIMSELF FAMILIAR WITH ALL UNDERGROUND UTILITIES, PIPES AND STRUCTURES. CONTRACTOR SHALL TAKE SOLE RESPONSIBILITY FOR ANY COSTS INCURRED DUE TO DAMAGE OF SAID UTILITIES.
2. CONTRACTOR SHALL NOT WILLFULLY PROCEED WITH CONSTRUCTION AS DESIGNED WHEN IT IS OBVIOUS THAT UNKNOWN OBSTRUCTIONS AND/OR GRADE DIFFERENCES EXIST THAT MAY NOT HAVE BEEN KNOWN DURING DESIGN. SUCH CONDITIONS SHALL BE IMMEDIATELY BROUGHT TO THE ATTENTION OF THE OWNERS REPRESENTATIVE. THE CONTRACTOR SHALL ASSUME FULL RESPONSIBILITY FOR ALL NECESSARY REVISIONS DUE TO FAILURE TO GIVE SUCH NOTIFICATION.
3. CONTRACTOR SHALL BE RESPONSIBLE FOR ANY COORDINATION WITH SUBCONTRACTORS AS REQUIRED TO ACCOMPLISH THE LANDSCAPE CONSTRUCTION FOR THIS PROJECT.
4. ALL PLANT MATERIAL SHALL BE APPROVED BY THE OWNER'S REPRESENTATIVE UPON DELIVERY TO THE SITE, AND PRIOR TO INSTALLATION.
5. IF DISCREPANCIES ARISE BETWEEN ACTUAL PLANTING AREA SIZES IN THE FIELD AND THOSE SHOWN ON THE PLANS, CONTRACTOR SHALL CONTACT THE OWNER'S REPRESENTATIVE FOR RESOLUTION. FAILURE TO MAKE SUCH CONFLICTS KNOWN WILL RESULT IN CONTRACTOR'S LIABILITY FOR MATERIALS RELOCATION.
6. FINAL LOCATIONS OF ALL PLANT MATERIALS SHALL BE SUBJECT TO APPROVAL OF THE OWNER'S REPRESENTATIVE.
7. THE CONTRACTOR IS RESPONSIBLE FOR THE PROTECTION OF ALL EXISTING TREES AND LANDSCAPING THAT IS DESIGNATED TO REMAIN. THE CONTRACTOR SHALL PROVIDE TEMPORARY FENCING OR OTHER APPROVED GUARDS OUTSIDE DRIP LINE (OUTER PERIMETER OF BRANCHES) OF TREES TO PROTECT FROM DAMAGE (SEE DETAIL). DO NOT STORE CONSTRUCTION MATERIALS, PERMIT VEHICULAR TRAFFIC OR PEDESTRIAN ACCESS WITHIN DRIP LINE TO AVOID SOIL COMPACTION. COORDINATE WITH ARCHS. AND CIVIL PLANS.
8. THE CONTRACTOR SHALL SUPPLY ALL PLANT MATERIAL IN QUANTITIES SUFFICIENT TO COMPLETE THE PLANTING SHOWN ON THE DRAWINGS.
9. LANDSCAPE CONTRACTOR IS RESPONSIBLE FOR THE DEPTHS DESCRIBED FOR TURF AREAS AND SHRUB BEDS AS INDICATED IN SHT. L-L001 DTL. B. IF NECESSARY DIG SUBGRADE IN SHRUB BEDS AND SODDED AREAS DOWN AS SPECIFIED BEFORE PLACING AMENDED TOPSOIL. REFER TO GRADING PLAN FOR FINISH GRADE AND DRAINAGE.
10. ANY PROPOSED SUBSTITUTIONS OF PLANT SPECIES SHALL BE MADE WITH PLANTS OF EQUIVALENT OVERALL FORM, HEIGHT, BRANCHING HABIT, FLOWER, LEAF, COLOR, FRUIT AND CULTURE ONLY AS APPROVED BY THE OWNER'S REPRESENTATIVE.
12. TREES SHALL NOT BE PLANTED LESS THAN 5'-0" FROM CURBS OR HARD SURFACE AREAS UNLESS A ROOT BARRIER IS INSTALLED.
13. A SOILS REPORT SHALL BE PROVIDED BY THE CONTRACTOR, AND SHALL DESCRIBE THE DEPTH, COMPOSITION, AND BULK DENSITY OF THE TOPSOIL AND SUBSOIL AT THE SITE AND SHALL INCLUDE RECOMMENDATIONS FOR SOIL AMENDMENTS. REFER TO SPECS.
14. 2H:1V MAXIMUM SLOPE IN LANDSCAPED AREAS.

REFERENCE SCHEDULE NOTES (B)

SYMBOL	DESCRIPTION	QTY
1	BIONATIVE TURF-GRASS - PLACE OVER 3 INCHES OF TOPSOIL	
2	4" OF BARK MULCH IN SHRUB BED OVER 12" OF TOPSOIL AND WEED BARRIER FABRIC, TYP. - REFER TO SHT. L-L501 DTL. I	18,556 sf
3	ROCK MULCH - TYPE 1 - 3 INCH DEPTH - MATCH EXISTING COLOR AND TYPE, TYP. - REFER TO SHT. L-L501 DTL. H	925 sf
4	ADA SIGN, TYP. - REFER TO CIVIL PLANS	
5	TURF WITH 6 INCHES OF TOPSOIL, TYP. - REFER TO SHT. L-L501 DTL. I	
6	PROTECT IN PLACE EXISTING LANDSCAPE AND PLANT MATERIAL	
7	3" DEPTH OF ROCK MULCH TYPE 2 - 3/4 INCH DIA. FRACTURED - TAN - OVER WEED BARRIER FABRIC, TYP. - REFER TO SHT. L-L501 DTL. H	691 sf
8	DUMPSTER - REFER TO ARCHS. PLANS	
9	PROTECT IN PLACE EXISTING TREE	
10	INTERCOM/PROX READER STANCHION - REFER TO ARCHS. AND ELECT. PLANS	
11	NEW RISING FENCED BARRIER - REFER TO ARCHS. AND ELECT. PLANS	
12	SITE LIGHTING - REFER TO ELECT. PLANS	
13	ROCK MULCH - TYPE 3 - 6 INCH DEPTH - 1 TO 3 DIA. - FRACTURED, TYP. - REFER TO SHT. L-L501 DTL. H (2)	11,904 sf

SYMBOL	FENCE DESCRIPTION	QTY
FP-01	FENCING - MATCH EXISTING	
FP-02	HANDRAIL, TYP. - REFER TO ARCHS. PLANS	
FP-03	GATE - MATCH EXISTING	

SYMBOL	PAVING DESCRIPTION	QTY
P-01	CONCRETE STAIRS - REBUILD, TYP. - REFER TO SHT. L-L501 DTL. K & M	
P-02	FENCE WITH MOW CURB, TYP. - REFER TO SHT. L-L501 DTL. N	
P-03	CONCRETE MOW CURB - 12 INCH WIDE, TYP. - REFER TO SHT. L-L501 DTL. L	762 lf (2)
P-04	SITE LIGHTING WITH MOW CURB - REFER TO SHT. L-L501 DTL. J	

SYMBOL	SITE FURNISHINGS DESCRIPTION	QTY
S-01	BOLLARD - PIPE, TYP. - SEE DETAIL SHT. L-L501 DTL. F	19
S-02	BOLLARD, TYP. - REFER TO SHT. L-L501 DTL. K	9
S-03	BOLLARD - PIPE - REMOVABLE, TYP. - SHT. L-L501 DTL. F - SIMILAR	3
S-04	BOOT BRUSH - SCRUSHER - STAINLESS STEEL DELUXE SCRUSHER OR APPROVED EQUAL - MOUNT WITH ANCHORS - COORDINATE EXACT LOCATION WITH OWNER -	1

SYMBOL	WALL DESCRIPTION	QTY
W-01	SITE WALL - CASTE IN PLACE CONCRETE PLANTER - REFER TO ARCHS. PLANS	
W-02	EXISTING SITE COLUMNS- PROTECT IN PLACE	
W-03	SITE WALL - CASTE IN PLACE CONCRETE - REFER TO ARCHS. PLANS	

* QUANTITY INFORMATION PROVIDED FOR REFERENCE ONLY. CONTRACTOR RESPONSIBLE TO VERIFY ALL QUANTITIES.

E D A

[A] The Boston Building
9 Exchange Place, Suite 1100
Salt Lake City, Utah 84111

[O] 801 531 7600

[E] info@edaarch.com

[W] www.edaarch.com

PROJECT ARCHITECT RG
PROJECT MANAGER EP

LICENSED LANDSCAPE ARCHITECT
Richard L. Gilbert
No. 5734299
April 24, 2024
STATE OF UTAH

Arc Sitio Design, Inc
Landscape Architecture & Architectural Site Design
1058 East 2100 South Salt Lake City, Utah 84106
office 801 . 487 . 4923 www.arcsitiodesign.com

WASATCH COUNTY COURTS EXPANSION

1361 US-40
HEBER CITY, UT 84032

PROJECT NUMBER XXXXXX

#	DESCRIPTION	DATE
1	PERMIT REVIEW SET	04.24.24
2	ADDENDUM #2	06/12/24

LANDSCAPE NOTES

L-L100

24 APRIL 2024 © EDA

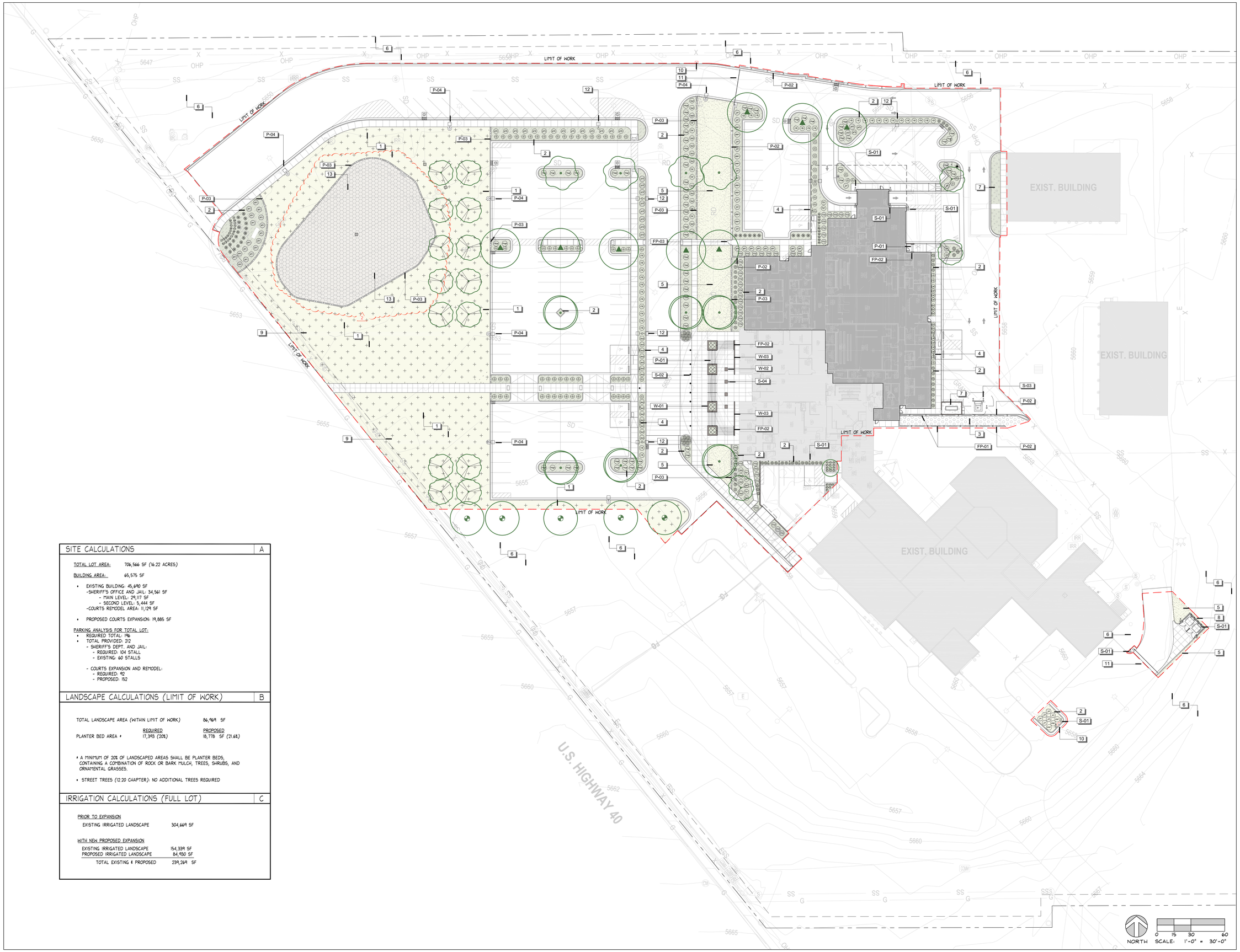

SITE CALCULATIONS | A

TOTAL LOT AREA: 706,566 SF (16.22 ACRES)

BUILDING AREA: 65,575 SF

- EXISTING BUILDING: 45,690 SF
  - SHERIFF'S OFFICE AND JAIL: 34,561 SF
    - MAIN LEVEL: 29,117 SF
    - SECOND LEVEL: 5,444 SF
  - COURTS REMODEL AREA: 11,129 SF
- PROPOSED COURTS EXPANSION: 19,885 SF

PARKING ANALYSIS FOR TOTAL LOT:

- REQUIRED TOTAL: 196
- TOTAL PROVIDED: 212
  - SHERIFF'S DEPT. AND JAIL:
    - REQUIRED: 104 STALL
    - EXISTING: 60 STALLS
  - COURTS EXPANSION AND REMODEL:
    - REQUIRED: 92
    - PROPOSED: 152

LANDSCAPE CALCULATIONS (LIMIT OF WORK) | B

TOTAL LANDSCAPE AREA (WITHIN LIMIT OF WORK) 86,969 SF

	REQUIRED	PROPOSED
PLANTER BED AREA *	17,393 (20%)	18,778 SF (21.6%)

* A MINIMUM OF 20% OF LANDSCAPED AREAS SHALL BE PLANTER BEDS, CONTAINING A COMBINATION OF ROCK OR BARK MULCH, TREES, SHRUBS, AND ORNAMENTAL GRASSES.

- STREET TREES (12.20 CHAPTER): NO ADDITIONAL TREES REQUIRED

IRRIGATION CALCULATIONS (FULL LOT) | C

PRIOR TO EXPANSION

EXISTING IRRIGATED LANDSCAPE 304,669 SF

WITH NEW PROPOSED EXPANSION

EXISTING IRRIGATED LANDSCAPE	154,339 SF
PROPOSED IRRIGATED LANDSCAPE	84,930 SF
TOTAL EXISTING + PROPOSED	239,269 SF

E D A

[A] The Boston Building
9 Exchange Place, Suite 1100
Salt Lake City, Utah 84111

[O] 801 531 7600

[E] info@edaarch.com

[W] www.edaarch.com

PROJECT ARCHITECT	RG
PROJECT MANAGER	EP

LICENSED LANDSCAPE ARCHITECT
Richard L. Gilbert
No. 5734299
April 24, 2024
STATE OF UTAH

Arc Sitio Design, Inc
Landscape Architecture & Architectural Site Design
1058 East 2100 South Salt Lake City, Utah 84106
office 801 . 487 . 4923 www.arcsitiodesign.com

WASATCH COUNTY
COURTS EXPANSION

1361 US-40
HEBER CITY, UT 84032

PROJECT NUMBER XXXXXX

#	DESCRIPTION	DATE
1	PERMIT REVIEW SET	04.24.24
2	ADDENDUM #2	06/12/24

LANDSCAPE PLAN

L-L101

24 APRIL 2024

© EDA

E D A

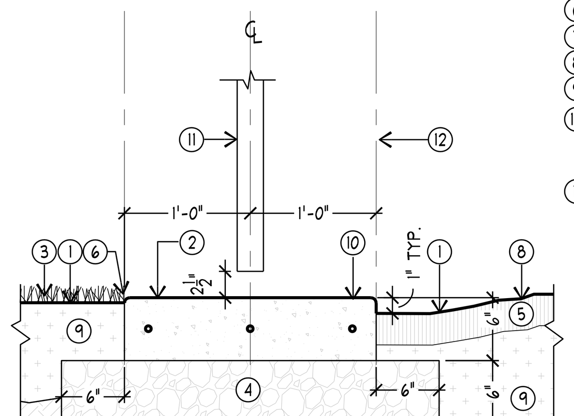

1. FINISH GRADE
2. CONCRETE MOW CURB. FINISH W/ MED. BROOM PERPENDICULAR TO HEADER RUN.
3. TURF
4. COMPACTED ROAD BASE
5. MULCH LAYER - SEE SPECS. AND DRAWINGS
6. 1/4" RADIUS, TYPICAL
7. COMPACTED SUBGRADE
8. SHRUB BED
9. AMENDED TOPSOIL
10. MOWCURB - REBAR (2) #4 CONTINUOUS. 2" CLEARANCE @ SIDES, TYP.
11. FENCE

NOTE:
1. WHEN MOW CURB IS ADJACENT TO BUILDING OR WALL, USE EXPANSION JOINT AND SLOPE 2% AWAY FROM BUILDING.
2. EXPANSION JOINTS AT 20' O.C. AND A TOOLED JOINT AT 10' O.C.

(N) CONCRETE MOW CURB AT TURF, FENCING AND SHRUB BED
SCALE: NTS — SECTION

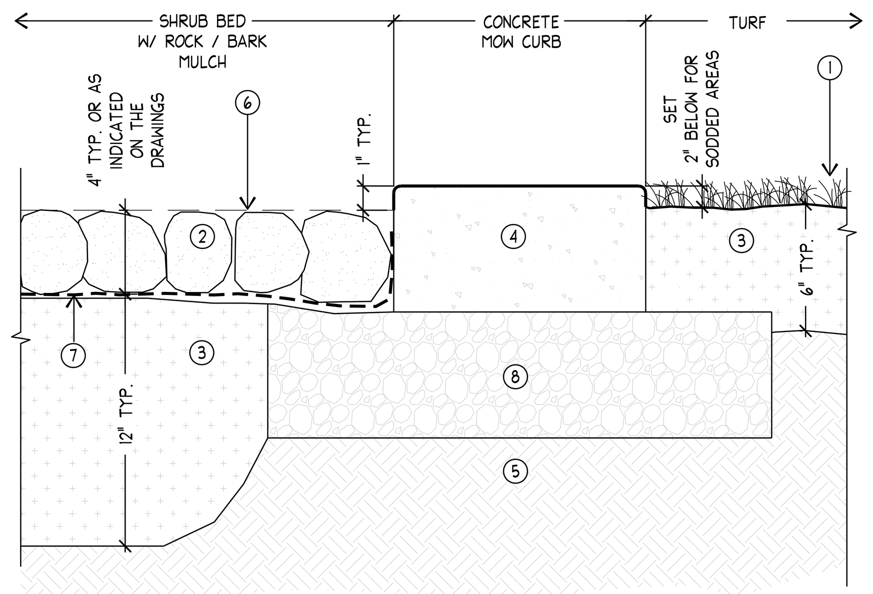

7. WEED BARRIER FABRIC - SEE SPECS.
8. ROAD BASE - REFER TO ARCHS. PLANS
4. CONCRETE MOW CURB - SEE NOTES SHT. L-L501 DTL. L
5. SUBGRADE
6. FINISH GRADE, TOP OF MULCH TO BE LEVEL
1. TURF
2. ROCK / BARK MULCH - SEE SPECS.
3. AMENDED TOPSOIL - SEE NOTES SHT. L-L100 DTL. B

(I) MULCH IN SHRUB BEDS
SCALE: NTS — SECTION

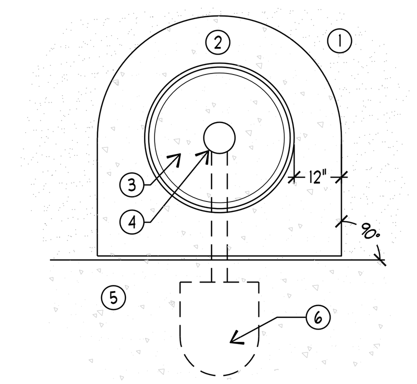

1. LANDSCAPING - SEE PLANTING PLAN
2. CONCRETE MOW CURB - REFER TO SHT. L-L501 DTL. L
3. CONCRETE BASE - REFER TO ELEC. DRAWINGS
4. LIGHT POLE - REFER TO ELEC. DRAWINGS
5. CONCRETE SIDEWALK OR CURB
6. LIGHT FIXTURE ABOVE

(J) LIGHT POLE MOW CURB (TO BE USED WITH TURF)
SCALE: NTS — PLAN

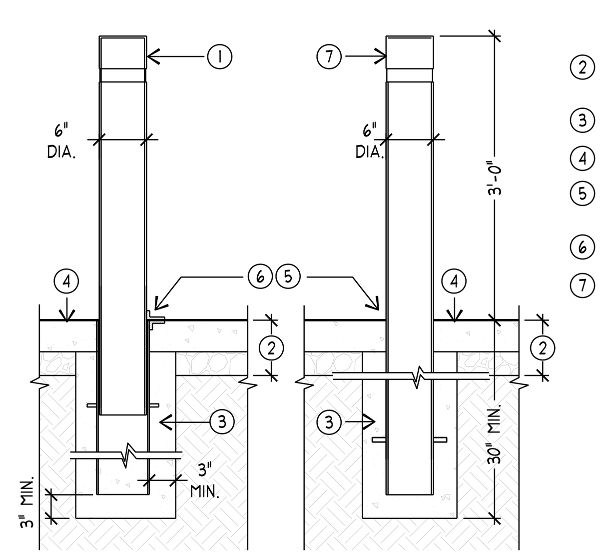

1. BOLLARD REMOVABLE - BD 5002, 6" I.D. SCHEDULE 40 STAINLESS STEEL PIPE, INSET REVEAL, EMBEDDED REMOVABLE, STAINLESS STEEL FINISH, FLAT STAINLESS STEEL TOP. REFER TO SPECS. SCH ENTERPRISES, LLC - 503.364.1353
2. CONCRETE FLATWORK - REFER AND CIVIL PLANS
3. CONCRETE FOOTING
4. FINISH GRADE
5. NON-SHRINK ANCHORING COMPOUND
6. HOLE 1" LARGER THAN UPRIGHT
7. BOLLARD - BD 5002, 6" I.D. SCHEDULE 40 STAINLESS STEEL PIPE, INSET REVEAL, EMBEDDED, STAINLESS STEEL FINISH, FLAT STAINLESS STEEL TOP. REFER TO SPECS. SCH ENTERPRISES, LLC - 503.364.1353

NOTE:
1. CONTRACTOR TO SUBMIT SHOP DRAWINGS FOR APPROVAL.
2. INSTALLATION TO BE COMPLETED IN ACCORDANCE WITH MANUFACTURER'S SPECIFICATIONS.

(K) BOLLARD
SCALE: NTS — SIDE VIEW

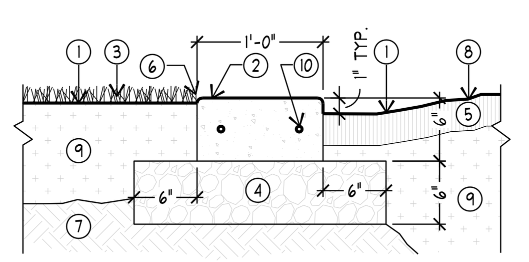

1. FINISH GRADE
2. CONCRETE MOW CURB. FINISH W/ MED. BROOM PERPENDICULAR TO HEADER RUN.
3. TURF
4. COMPACTED ROAD BASE
5. MULCH LAYER - SEE SPECS. AND DRAWINGS
6. 1/4" RADIUS, TYPICAL
7. COMPACTED SUBGRADE
8. SHRUB BED
9. AMENDED TOPSOIL
10. 12" MOWCURB - REBAR (2) #4 CONTINUOUS. 2" CLEARANCE @ SIDES, TYP.

NOTE:
1. WHEN MOW CURB IS ADJACENT TO BUILDING OR WALL, USE EXPANSION JOINT AND SLOPE 2% AWAY FROM BUILDING.
2. EXPANSION JOINTS AT 20' O.C. AND A TOOLED JOINT AT 10' O.C.

(L) CONCRETE MOW CURB - 12" WIDE
SCALE: NTS — SECTION

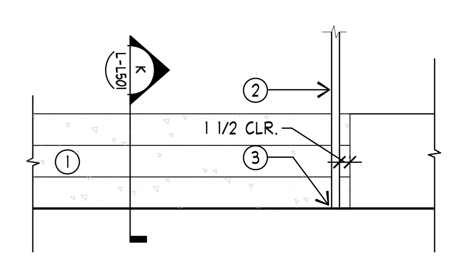

1. CONCRETE STEPS (K / L-L501)
2. 1-1/2" DIA. STAINESS STEEL HANDRAIL - SEE SPECS. (K / L-L501)
3. HANDRAIL ANCHOR, TYP. (D / L-L501)

(M) CONCRETE STEPS - TYPICAL FRONT ELEVATION
SCALE: NTS — FRONT ELEVATION

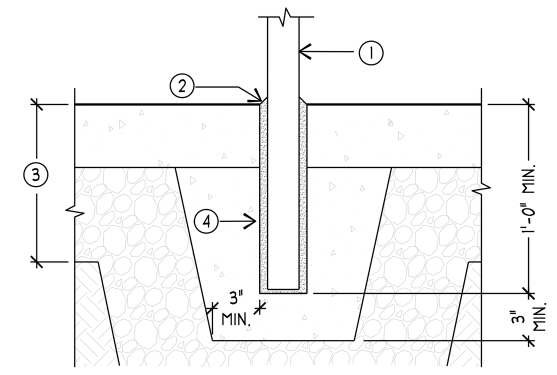

1. POST
2. NON-SHRINK ANCHORING COMPOUND, SLOPED AROUND POST (MORTAR TO MATCH CONCRETE COLOR)
3. CONCRETE PAVING OR STEPS
4. HOLE 1" LARGER THAN UPRIGHT

(D) HANDRAIL ANCHOR
SCALE: NTS — SECTION

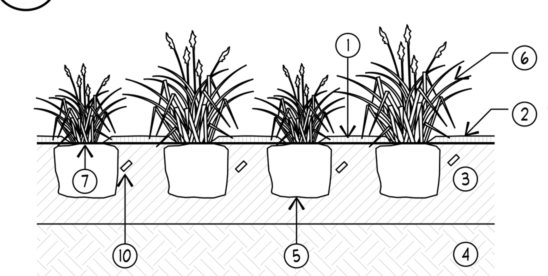

SECTION

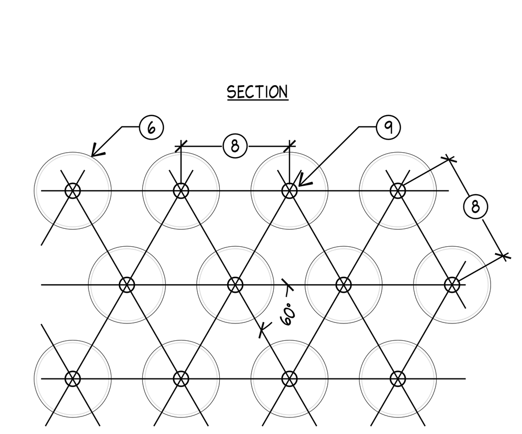

PLAN

1. MULCH 1" TO 2" BACK FROM PLANT
2. MULCH - SEE SPECS.
3. AMENDED TOPSOIL - SEE SPECS.
4. UNDISTURBED SUBGRADE
5. IF PLANTS ARE POT-BOUND AT PLANTING TIME, LOOSEN THE ROOTS AROUND THE BOTTOM AND SIDES OF THE ROOT BALL
6. PLANT
7. BE SURE THE CROWN OF THE PLANT (THE POINT WHERE ROOTS AND TOP JOIN) IS EVEN WITH THE SOIL SURFACE
8. PLANT SPACING VARIES - REFER TO PLANT SCHEDULE OR PLAN
9. CENTER OF PLANT
10. FERTILIZER TABLET - SEE SPECS.

NOTES:
1. PRUNE DEAD, DISEASED, DAMAGED, OR RUBBING BRANCHES AT PLANTING TIME.
2. REMOVE ALL LABELS, WIRES, ETC. FROM PLANT.
3. WATER PLANTS THOROUGHLY FOLLOWING PLANTING TO SETTLE THE SOIL AROUND THE ROOTS.

(E) PERENNIAL / GROUNDCOVER
SCALE: NTS — SECTION/PLAN

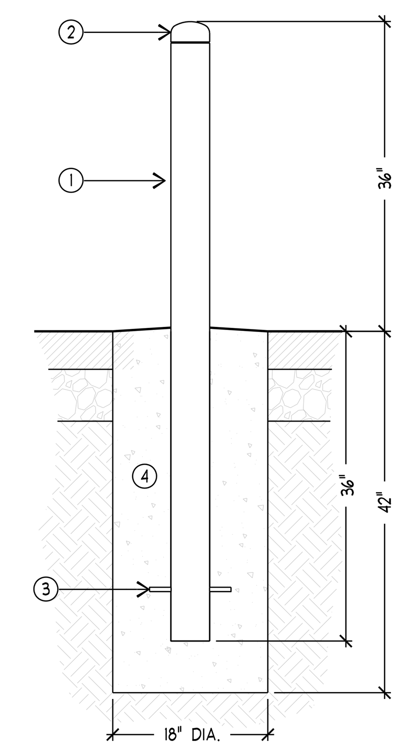

1. PIPE BOLLARD: 4" SCH-40 GALVANIZED STEEL PIPE (4-½" O.D.) FILLED WITH CONCRETE - CENTER IN FOOTING
2. WELDED STEEL CAP
3. #4 REBAR
4. CONCRETE FOOTING. SLOPE TOP OF FOOTING FOR DRAINAGE AT ¼" PER FOOT

NOTES
1. CONTRACTOR TO SUBMIT SHOP DRAWINGS FOR APPROVAL BY OWNER'S REPRESENTITIVE.

(F) PIPE BOLLARD
SCALE: NTS — SECTION

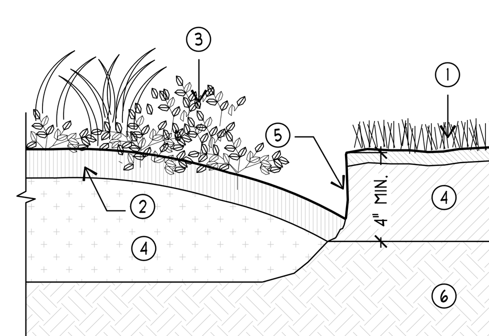

1. GRASS OR TURF
2. MULCH - AS SPECIFIED
3. SHURB BED
4. TOPSOIL LAYER
5. SHOVEL EDGE
6. SUBGRADE

(G) SHOVEL TURF EDGE AROUND TREE IN TURF
SCALE: NTS — SECTION

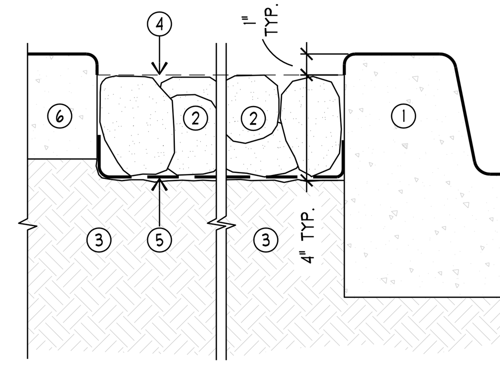

1. CURB - SEE CIVIL PLANS
2. ROCK MULCH - SEE SPECS.
3. SUBGRADE - 5" BELOW CURB AND SIDEWALK
4. FINISH GRADE. TOP OF MULCH SHALL BE LEVEL.
5. WEED BARRIER FABRIC - SEE SPECS.
6. SIDEWALK - SEE CIVIL PLANS

(H) ROCK MULCH ONLY
SCALE: NTS — SECTION

NOTES:
1. PLANT TREE PLUMB.
2. PRUNE DEAD, DISEASED, DAMAGED, OR RUBBING BRANCHES AT PLANTING TIME. DO NOT PRUNE LEADER.
3. REMOVE ALL LABELS, WIRES, ETC. FROM THE TREE'S STEM.

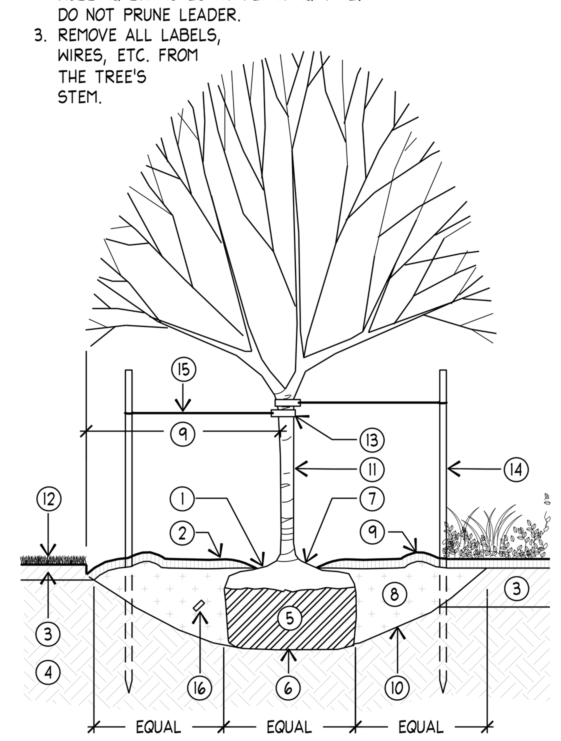

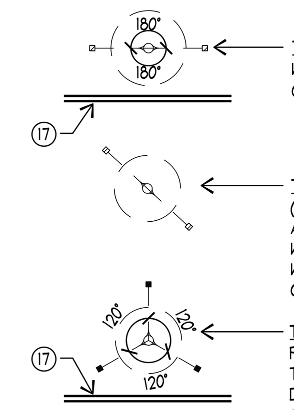

TREE STAKING ALONG ROADS OR WALK (ALL TREES LESS THAN 2" CALIPER)

TREE STAKING IN OPEN SPACES (TRESS UP TO 2" CALIPER). ALIGN STAKES PERPENDICULAR W/ DIRECTION OF PREVAILING WINDS. ALL STAKES TO BE CONSISTENT.

TREE STAKING ALIGN 2 STAKES PARALLEL W/ ROAD OR WALK (USE THREE STAKES FOR ALL DECIDUOUS TREES GREATER THAN 2" CAL.)

1. MULCH 1" TO 2" BACK FROM TRUNK
2. MULCH - SEE SPECS.
3. AMENDED TOPSOIL - SEE SPECS.
4. UNDISTURBED SUBGRADE
5. IF THE TREE IS BALLED AND BURLAPPED (OR CONTAINED IN A WIRE BASKET), CUT AND REMOVE THE ROPE, STRING, WIRE, AND/OR WIRE BASKET FROM AROUND THE TRUNK AND TOP 1/3 OF THE ROOT BALL
6. SET ROOTBALL ON UNDISTURBED SUBGRADE
7. TRUNK FLAIR- SET 1" TO 2" ABOVE FINISH GRADE
8. MAKE THE HOLE WIDE, AS MUCH AS THREE TIMES THE DIAMETER OF THE ROOT BALL, BUT ONLY AS DEEP AS THE ROOT BALL. BACKFILL WITH 1/2 TOPSOIL BORROW FROM PIT AND 1/2 AMENDED TOPSOIL
9. REMOVE SOD AT DRIPLINE OF TREE TO FORM TREE WELL OR A MIN. WIDTH OF 3'-0" DIA.
10. ROUGHEN SIDES PRIOR TO BACKFILLING. SETTLE W/ WATER IN 12" LIFTS
11. IF PLANTED IN LATE FALL, WRAP TRUNK, STARTING AT THE BOTTOM TO THE FIRST SET OF BRANCHES. REMOVE THE WRAP SPRING, AFTER THE LAST FROST. ONLY WRAP IF SUN HITS ITS TRUNK IN WINTER.
12. DO NOT PLANT LAWN IN TREE PIT
13. 3" OR WIDER NYLON WEBBING W/ METAL GROMMETS
14. 6'-0" X 2" DIA. ROUND WOOD STAKES, TWO PER TREE (THE STAKES SHALL BE PLUMB AND SET AT THE SAME HIEGHT)
15. DOUBLE STRAND PLIABLE NO. 10-GAGE GALVANIZED STEEL WIRE OR VINYL-COATED STEEL WIRE, DO NOT PULL TAUT
16. FERTILIZER TABLET - SEE SPECS.
17. EDGE OF WALK OR CURB

(A) DECIDUOUS TREE WITH STAKING
SCALE: NTS — SECTION

NOTES:
1. PLANT TREE PLUMB.
2. PRUNE DEAD, DISEASED, DAMAGED, OR RUBBING BRANCHES AT PLANTING TIME.
3. REMOVE ALL LABELS, WIRES, ETC. FROM THE TREE'S STEM.

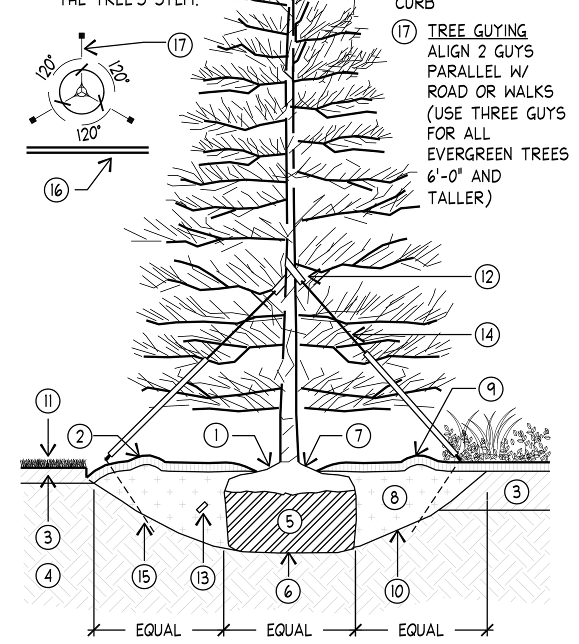

14. DOUBLE STRAND PLIABLE NO. 10-GAGE GALVANIZED STEEL WIRE OR VINYL-COATED STEEL WIRE, DO NOT PULL TAUT
15. 1/2" X 18" REBAR STAKES (THREE STAKES PER TREE)
16. EDGE OF WALK OR CURB
17. TREE GUYING ALIGN 2 GUYS PARALLEL W/ ROAD OR WALKS (USE THREE GUYS FOR ALL EVERGREEN TREES 6'-0" AND TALLER)

1. MULCH 1" TO 2" BACK FROM TRUNK
2. MULCH - SEE SPECS.
3. AMENDED TOPSOIL - SEE SPECS.
4. UNDISTURBED SUBGRADE
5. IF THE TREE IS BALLED AND BURLAPPED (OR CONTAINED IN A WIRE BASKET), CUT AND REMOVE THE ROPE, STRING, WIRE, AND/OR WIRE BASKET FROM AROUND THE TRUNK AND TOP 1/3 OF THE ROOT BALL
6. SET ROOTBALL ON UNDISTURBED SUBGRADE
7. TRUNK FLAIR- SET 1" TO 2" ABOVE FINISH GRADE
8. MAKE THE HOLE WIDE, AS MUCH AS THREE TIMES THE DIAMETER OF THE ROOT BALL, BUT ONLY AS DEEP AS THE ROOT BALL. BACKFILL WITH 1/2 TOPSOIL BORROW FROM PIT AND 1/2 AMENDED TOPSOIL
9. REMOVE SOD AT DRIPLINE OF TREE TO FORM TREE WELL OR A MIN. WIDTH OF 3'-0" DIA.
10. ROUGHEN SIDES PRIOR TO BACKFILLING. SETTLE W/ WATER IN 12" LIFTS
11. DO NOT PLANT LAWN IN TREE PIT
12. 3" OR WIDER NYLON WEBBING W/ METAL GROMMETS
13. FERTILIZER TABLET - SEE SPECS.

(B) EVERGREEN TREE WITH GUYING
SCALE: NTS — SECTION

NOTES:
1. PLANT SHRUB PLUMB.
2. PRUNE DEAD, DISEASED, DAMAGED, OR RUBBING BRANCHES AT PLANTING TIME. DO NOT PRUNE LEADER.
3. REMOVE ALL LABELS, WIRES, ETC. FROM SHRUB.

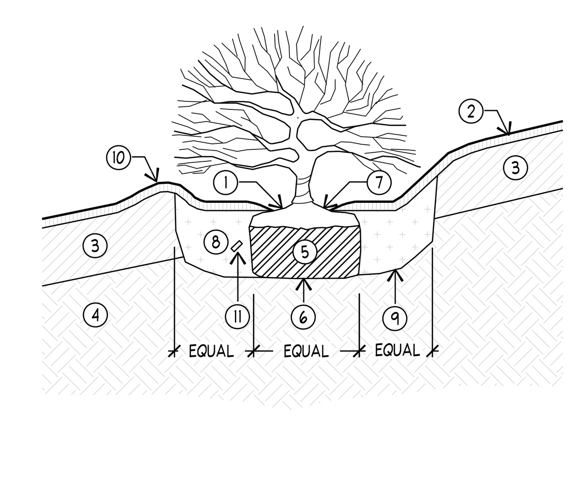

1. MULCH 1" TO 2" BACK FROM TRUNK
2. MULCH - SEE SPECS.
3. AMENDED TOPSOIL - SEE SPECS.
4. UNDISTURBED SUBGRADE
5. IF THE SHRUB IS BALLED AND BURLAPPED (OR CONTAINED IN A WIRE BASKET), CUT AND REMOVE THE ROPE, STRING, WIRE, AND/OR WIRE BASKET FROM AROUND THE TRUNK AND TOP 1/3 OF THE ROOT BALL
6. SET ROOTBALL ON UNDISTURBED SUBGRADE
7. TRUNK FLAIR- SET 1" TO 2" ABOVE FINISH GRADE
8. MAKE THE HOLE WIDE, AS MUCH AS THREE TIMES THE DIAMETER OF THE ROOT BALL, BUT ONLY AS DEEP AS THE ROOT BALL. BACKFILL WITH 1/2 TOPSOIL BORROW FROM PIT AND 1/2 AMENDED TOPSOIL
9. ROUGHEN SIDES PRIOR TO BACKFILLING. SETTLE W/ WATER IN 12" LIFTS
10. FORM WELL AT EACH PLANT USING TOPSOIL
11. FERTILIZER TABLET - SEE SPECS.

(C) SHRUB
SCALE: NTS — SECTION

[A] The Boston Building
9 Exchange Place, Suite 1100
Salt Lake City, Utah 84111
[O] 801 531 7600
[E] info@edaarch.com
[W] www.edaarch.com

PROJECT ARCHITECT	RG
PROJECT MANAGER	EP

LICENSED LANDSCAPE ARCHITECT
Richard L. Gilbert
No. 5734299
April 24, 2024
STATE OF UTAH

Arc Sitio Design, Inc
Landscape Architecture & Architectural Site Design
1058 East 2100 South Salt Lake City, Utah 84106
office 801 . 487 . 4923 www.arcsitiodesign.com

WASATCH COUNTY
COURTS EXPANSION

1361 US-40
HEBER CITY, UT 84032

PROJECT NUMBER		XXXXXX
#	DESCRIPTION	DATE
1	PERMIT REVIEW SET	04.24.24

LANDSCAPE DETAILS

L-L501

23 MAY 2024

©EDA

E:\23040_Wasatch Courts Expansion\Cadd\L-LANDSCAPE.dwg May 06, 2024 - 8:53am
Plot Scale:

IRRIGATION SCHEDULE — D

SYMBOL	MANUFACTURER/MODEL	ARC	PSI	GPM	RADIUS
8	Rain Bird RD-06-S-P30-F-U 08Q	90	30	0.26	8'
10	Rain Bird RD-06-S-P30-F-U 10F	360	30	1.64	10'
10	Rain Bird RD-06-S-P30-F-U 10H	180	30	0.82	10'
12	Rain Bird RD-06-S-P30-F-U 12F	360	30	2.6	12'
12	Rain Bird RD-06-S-P30-F-U 12H	180	30	1.3	12'
12	Rain Bird RD-06-S-P30-F-U 12Q	90	30	0.65	12'
8	Rain Bird RD-06-S-P30-F-U 08 HE-V	Adj	30	≤1.19	8'
10	Rain Bird RD-06-S-P30-F-U 10 HE-V	Adj	30	≤1.8	10'
12	Rain Bird RD-06-S-P30-F-U 12 HE-V	Adj	30	≤2.38	12'
8	Rain Bird RD-12-S-P30-F-U 08Q	90	30	0.26	8'
10	Rain Bird RD-12-S-P30-F-U 10F	360	30	1.64	10'
10	Rain Bird RD-12-S-P30-F-U 10H	180	30	0.82	10'
12	Rain Bird RD-12-S-P30-F-U 12F	360	30	2.6	12'
12	Rain Bird RD-12-S-P30-F-U 12H	180	30	1.3	12'
12	Rain Bird RD-12-S-P30-F-U 12Q	90	30	0.65	12'
8	Rain Bird RD-12-S-P30-F-U 08 HE-V	Adj	30	≤1.19	8'
10	Rain Bird RD-12-S-P30-F-U 10 HE-V	Adj	30	≤1.8	10'
12	Rain Bird RD-12-S-P30-F-U 12 HE-V	Adj	30	≤2.38	12'

SYMBOL	MANUFACTURER/MODEL/DESCRIPTION	PSI	GPM	RADIUS
25	Rain Bird 5006-PL-PC-SAM-R-SS-MPR 25 Turf Rotor, 6in. Pop-Up, Stainless Steel Riser, with Flow Shut-Off Device. Matched Precipitation Rotor (MPR Nozzle), Arc and Radius as per Symbol. 25 ft=red, 30 ft=green, 35ft=beige. With Seal-A-Matic Check Valve, and In-Stem Pressure Regulator.	35		24'
30	Rain Bird 5006-PL-PC-SAM-R-SS-MPR 30 Turf Rotor, 6in. Pop-Up, Stainless Steel Riser, with Flow Shut-Off Device. Matched Precipitation Rotor (MPR Nozzle), Arc and Radius as per Symbol. 25 ft=red, 30 ft=green, 35ft=beige. With Seal-A-Matic Check Valve, and In-Stem Pressure Regulator.	35		30'
35	Rain Bird 5006-PL-PC-SAM-R-SS-MPR 35 Turf Rotor, 6in. Pop-Up, Stainless Steel Riser, with Flow Shut-Off Device. Matched Precipitation Rotor (MPR Nozzle), Arc and Radius as per Symbol. 25 ft=red, 30 ft=green, 35ft=beige. With Seal-A-Matic Check Valve, and In-Stem Pressure Regulator.	35		34'

SYMBOL	MANUFACTURER/MODEL/DESCRIPTION
	Rain Bird XCZ-100-PRBR Drip Control Kit, 1" PESB valve, 1" Basket Filter, and 40psi Pressure Regulator. 0.3-20 gpm.
	Area to Receive Dripline Netafim TLCV-026-12 Techline Pressure Compensating Landscape Dripline with Check Valve. 0.26 GPH emitters at 12" O.C. Dripline laterals spaced at 12" apart, with emitters offset for triangular pattern. 17mm.

SYMBOL	MANUFACTURER/MODEL/DESCRIPTION
	Rain Bird PESB-PRS-D 1", 1-1/2", 2" Plastic Industrial Valves. Low Flow Operating Capability, Globe Configuration. With Pressure Regulating Module, and Scrubber Technology for Reliable Performance in Dirty Water Irrigation Applications.
	Rain Bird 33-DLRC 3/4" Brass Quick-Coupling Valve, with Corrosion-Resistant Stainless Steel Spring, Locking Thermoplastic Rubber Cover, Double Track Key Lug, and 2-Piece Body.
	Matco-Norca 200RTD 2" to 12" Ductile Iron Epoxy Coated & Resilient Wedge Isolation Shut Off Valve. Same size as mainline pipe. Ring-Tite option.
	Nibco T-113 Class 125 bronze isolation gate valve with wheel handle, Sized equal to pipe size. Isolation valves shall be used at all valve manifolds and isolation points or as indicated on drawings.
mv	Rain Bird EFB-CP 2" 1in., 1-1/4", 1-1/2in., 2in. Brass Master Valve, that is Contamination Proof w/Self-Flushing Filter Screen. Globe Configuration, Reclaimed Water Compatible, and Purple Handle Cover Designates Non-Potable Water Use.
D	Ford Manual Drain B11-333
C	Rain Bird ESPLXME2P w/ (3) ESPLXMSM12 48 Station, Traditionally-Wired , PRO Smart, Commercial Controller. (1) ESPLXME2P 12-Station, PRO Smart, (Module Included) Indoor/Outdoor, Plastic Wall-Mount Enclosure w/ (3) ESPLXMSM12 - 12-Station Expansion Modules.
RS	Rain Bird RSD-BEx Rain Sensor, with metal latching bracket, extension wire.
FS	Rain Bird FS-150-B 1-1/2in. Flow Sensor, Brass Model. Suggested Operating Range 4.0 GPM to 80.0 GPM. Size for Flow Not According to Pipe Size. Rain Bird Compatible Controllers: ESP-LXIVM(P) |LXD |LXME2(P) | ME3, or Controllers Accepting Custom K-Factor and Offset. Install in Rain Bird Valve Box.
F	Amiad 2-A-MSIG-Steel Screen Amiad 2in. Mini Sigma, Angled Self-Cleaning Filter, BSPT or NPT inlet-outlet. Stainless Steel Weavewire Screen Element. ADI-P Bluetooth Range Controller. Maximum working pressure 116psi. Install in Strong Box (SBBC-52AL) or GuardShack (GS-4.5) enclosure - verify size with manufacturer's recommendations.
P.O.C.	Point of Connection 2"
	Irrigation Lateral Line: PVC Schedule 40
	Irrigation Mainline: PVC Schedule 40
	Pipe Sleeve: PVC Class 200 SDR 21

Valve Callout
- # — Valve Number
- # — Valve Flow
- #" — Valve Size

- Existing Irrigation Mainline - Field Verify - Remove or Abandon in Place
- Existing Irrigation Lateral Line - Field Verify - Remove or Abandon in Place
- Existing Valves - Field Verify - Remove and Convey to Owner
- C — Existing Controller - Remove and Convey to Owner, Coordinate with Owner's Rep.

- Existing Irrigation Mainline - Field Verify - Protect in Place
- Existing Irrigation Lateral Line - Field Verify - Protect in Place
- Existing Valves - Field Verify - Protect in Place

IRRIGATION NOTES — A

1. IT IS THE INTENT OF THESE IRRIGATION PLANS TO PROVIDE THE CONTRACTOR WITH CONSTRUCTION INFORMATION THAT WILL ENABLE HIM TO PROVIDE AND INSTALL A COMPLETE AND OPERATIONAL IRRIGATION SYSTEM. THE CONTRACTOR SHALL PROVIDE ALL LABOR, PARTS AND MATERIALS REQUIRED.
2. THE CONTRACTOR SHALL VERIFY THE AVAILABLE WATER PRESSURE ON SITE PRIOR TO CONSTRUCTION AND REPORT ANY DISCREPANCIES TO THE OWNER'S REPRESENTATIVE. IN THE EVENT THE PRESSURE DIFFERENCES ARE NOT REPORTED PRIOR TO THE START OF CONSTRUCTION, THE CONTRACTOR SHALL ASSUME FULL RESPONSIBILITY FOR ANY REVISIONS NECESSARY. CONTRACTOR TO MAINTAIN OPERATING PRESSURE FOR EACH ZONE TO THE LAST HEAD.
3. IT IS THE RESPONSIBILITY OF THE CONTRACTOR TO FAMILIARIZE HIMSELF WITH ALL GRADE DIFFERENCES, LOCATION OF WALLS, STRUCTURES, WALKS, AND UTILITIES. THE IRRIGATION CONTRACTOR SHALL REPAIR OR REPLACE ALL ITEMS DAMAGED BY HIS WORK, HE SHALL COORDINATE HIS WORK WITH OTHER CONTRACTORS FOR THE LOCATION AND INSTALLATION OF PIPE SLEEVES AND LATERALS THROUGH WALLS AND UNDER PAVING.
4. DO NOT WILLFULLY INSTALL THE IRRIGATION SYSTEM AS SHOWN ON THE PLANS WHEN IT IS OBVIOUS IN THE FIELD THAT UNKNOWN OBSTRUCTIONS OR GRADING DIFFERENCES MAY NOT HAVE BEEN CONSIDERED IN THE ENGINEERING. SUCH OBSTRUCTIONS OR DIFFERENCES SHOULD BE BROUGHT TO THE ATTENTION OF THE LANDSCAPE ARCHITECT. IN THE EVENT THAT THIS NOTIFICATION IS NOT PERFORMED, THE CONTRACTOR SHALL ASSUME FULL RESPONSIBILITY FOR ANY REVISIONS NECESSARY.
5. THIS DESIGN IS DIAGRAMMATIC, ALL IRRIGATION EQUIPMENT, PIPING, VALVES, ETC., SHOWN WITHIN PAVED AREAS ARE FOR DESIGN CLARIFICATION ONLY AND SHALL BE INSTALLED IN PLANTING AREAS WHEREVER POSSIBLE.
6. IRRIGATION SYSTEM IS TO BE INSTALLED AS SHOWN ON THE PLANS AND IN ACCORDANCE WITH ALL APPLICABLE CODES AND REGULATIONS.
7. THE CONTRACTOR SHALL FLUSH AND ADJUST ALL SPRINKLER HEADS AND VALVES FOR OPTIMUM COVERAGE. INSTALL ALL SPRINKLER HEADS WITH NOZZLES OF THE APPROPRIATE DEGREE AND RADIUS FOR THE AREA TO BE COVERED. ADJUST ALL NOZZLES TO MINIMIZE SPRAYING ONTO WALKS, BUILDINGS, ETC.
8. ALL IRRIGATION EQUIPMENT NOT OTHERWISE DETAILED OR SPECIFIED SHALL BE INSTALLED AS PER MANUFACTURES SPECS.
9. ALL PIPE INSTALLED IN PAVING SHALL BE SLEEVED, SEE DETAILS.

EXISTING IRRIGATION SYSTEM - OVERALL:

1. THE CONTRACTOR SHALL MAINTAIN THE EXISTING IRRIGATION SYSTEM IN GOOD WORKING CONDITION TO ENSURE THAT EXISTING PLANT MATERIAL RECEIVES THE PROPER AMOUNT OF WATER DURING ALL PHASES OF CONSTRUCTION.
2. THE CONTRACTOR SHALL MAKE MODIFICATIONS TO THE EXISTING IRRIGATION SYSTEM AS REQUIRED WHERE EXISTING IRRIGATION ZONES WILL BE DISRUPTED DUE TO PROPOSED CONSTRUCTION.
3. MODIFICATIONS TO THE EXISTING IRRIGATION SYSTEM MAY INCLUDE BUT IS NOT LIMITED TO: RE-ROUTING EXISTING IRRIGATION MAINLINES AND LATERAL LINES, RELOCATING EXISTING IRRIGATION VALVES AND CONTROL WIRING, AND RELOCATING EXISTING IRRIGATION HEADS.
4. THE CONTRACTOR MAY ALSO BE REQUIRED TO HAND-WATER EXISTING PLANT MATERIAL AS REQUIRED IF THE MODIFICATIONS TO THE EXISTING IRRIGATION SYSTEM AS PREVIOUSLY LISTED ARE NOT MADE.
5. ANY EXISTING HEAD, VALVE, VALVE MARKER, VALVE BOX, OR OTHER EXISTING EQUIPMENT LOCATED WHERE THERE WILL BE A GRADE OR SURFACE MATERIAL CHANGE, SHALL BE ADJUSTED UP OR DOWN TO ITS PROPER POSITION IN RELATION TO THE NEW FINISHED GRADE, AT NO ADDITIONAL COST TO THE OWNER, UNLESS THE PLANS SHOW IT TO BE RELOCATED.

VALVE SCHEDULE — B

NUMBER	MODEL	SIZE	TYPE	GPM	PSI	PSI @ POC
1	Rain Bird XCZ-100-PRBR	1"	Area for Dripline	11.54	39.8	40.5
2	Rain Bird XCZ-100-PRBR	1"	Area for Dripline	2.1	32.4	32.9
3	Rain Bird XCZ-100-PRBR	1"	Area for Dripline	4.64	34.2	34.8
4	Rain Bird XCZ-100-PRBR	1"	Area for Dripline	8.67	37.0	37.6
5	Rain Bird PESB-PRS-D	2"	Turf Rotor	40.92	43.7	47.1
6	Rain Bird XCZ-100-PRBR	1"	Area for Dripline	10.48	39.5	40.2
7	Rain Bird PESB-PRS-D	1"	Shrub Spray	6.56	32.3	33.0
8	Rain Bird PESB-PRS-D	EX *	Existing Field Verify		4.8	Field Verify
9	Rain Bird PESB-PRS-D	EX *	Existing Field Verify		4.8	Field Verify
10	Rain Bird XCZ-100-PRBR	1"	Area for Dripline	6.75	36.4	37.0
11	Rain Bird PESB-PRS-D	2"	Turf Rotor	32.12	45.4	48.7
12	Rain Bird PESB-PRS-D	2"	Turf Rotor	46.34	43.4	49.7
13	Rain Bird PESB-PRS-D	2"	Turf Rotor	39.72	42.4	47.3
14	Rain Bird PESB-PRS-D	2"	Shrub Spray	36.8	36.1	42.4
15	Rain Bird XCZ-100-PRBR	1"	Area for Dripline	18.34	53.6	55.5
16	Rain Bird PESB-PRS-D	2"	Turf Rotor	38.31	43.3	49.3
17	Rain Bird PESB-PRS-D	2"	Turf Rotor	33.1	41.6	46.3
18	Rain Bird PESB-PRS-D	2"	Turf Rotor	46.34	42.1	50.7
19	Rain Bird PESB-PRS-D	2"	Turf Rotor	33.1	42.2	47
20	Rain Bird PESB-PRS-D	2"	Turf Rotor	46.34	42.6	51.4
21	Rain Bird PESB-PRS-D	2"	Shrub Spray	18.06	39.3	41.2
22	Rain Bird PESB-PRS-D	1-1/2"	Turf Rotor	26.64	40.8	44.6
23	Rain Bird PESB-PRS-D	2"	Turf Rotor	32.13	43.3	48.7
24	Rain Bird PESB-PRS-D	2"	Turf Rotor	35.36	41.3	47.7
25	Rain Bird XCZ-100-PRBR	1"	Area for Dripline	1.27	32.1	
26	Rain Bird XCZ-100-PRBR	1"	Area for Dripline	4.53	33.6	
27	Rain Bird PESB-PRS-D	2"	Turf Spray	14.92	35.6	

* Size per existing irrigation zone demand. Field verify.

REFERENCE NOTE SCHEDULE — C

SYMBOL	IRRIGATION DESCRIPTION
IR-01	IRRIGATION EQUIPMENT SHOWN OUTSIDE PLANTING AREAS FOR GRAPHIC CLARITY ONLY. EQUIPMENT SHALL BE LOCATED INSIDE SHRUB BEDS & AS APPROVED BY THE LANDSCAPE ARCHITECT.
IR-02	PROTECT IN PLACE EXISTING IRRIGATION SYSTEM
IR-03	REPAIR EXISTING IRRIGATION SYSTEM - ADJUST EXISTING IRRIGATION HEADS & PIPING AS REQUIRED TO ACCOMMODATE NEW IMPROVEMENTS.
IR-04	COORDINATE LAYOUT OF IRRIGATION DRIPPERLINE / HEADS PRIOR TO PLACEMENT OF PROPOSED PLANT MATERIAL,TYP.
IR-05	WIRE MASTER VALVE DIRECTLY TO CONTROLLER USING PE-39 SHIELDED COMMUNICATIONS CABLE AND THREE 14 GA. WIRES (RED, WHITE, ORANGE).
IR-06	INSTALL SLEEVE THROUGH WALLS, TYPICAL. COORDINATE WITH CONTRACTOR RESPONSIBLE FOR WALL CONSTRUCTION.
IR-07	EXISTING IRRIGATION CONTROLLER - REMOVE AND CONVEY TO OWNER - CONNECT ALL EXISTING AND PROPOSED WIRES TO VALVES TO THE NEW CONTROLLER - REFER TO IRRIGATION SCHEDULE AND DETAILS. COORDINATE WITH ELECTRICAL CONTRACTOR FOR 120V POWER, SEE ELECTRICAL DWGS.
IR-08	CONNECT TO EXISTING P.O.C. - 2 INCH - COORDINATE WITH CIVIL PLANS - RELOCATE INTO SHRUB BED. COORDINATE FINAL LOCATION WITH OWNER'S REP.
IR-09	RELOCATE EXISTING VALVES AND RECONNECT TO NEW MAINLINE AND RECONNECT TO CONTROLLER
IR-10	APPROXIMATE LOCATION OF EXISTING MAINLINE AND/OR VALVE. REMOVE OR ABANDON IN PLACE. CONTRACTOR TO FIELD VERIFY. MAINTAIN VALVES SERVING PARTS OF THE LANDSCAPE OUTSIDE THE LIMITS OF WORK.
IR-11	APPROXIMATE LOCATION OF EXISTING MAINLINE AND/OR VALVE. PROTECT IN PLACE. CONTRACTOR TO FIELD VERIFY. RECONNECT EXISTING AND PROPOSED CONTROL WIRES TO NEW CONTROLLER.
IR-12	ALIGN VALVE BOXES WITHIN SHRUB BEDS & ALIGN WITH EDGE OF PAVEMENT, TYP.
IR-13	CONNECT TO EXISTING MAINLINE - CONNECT TO NEW MAINLINE AND CONNECT EXISTING AND PROPOSED CONTROL WIRES TO NEW CONTROLLER
IR-14	NEW IRRIGATION CONTROLLER - CONNECT ALL EXISTING AND PROPOSED WIRES TO NEW CONTROLLER - REFER TO COORDINATE WITH ELECTRICAL CONTRACTOR FOR 120V POWER, SEE ELECTRICAL DWGS.
IR-15	INSTALL THE RAIN SENSOR IN A LOCATION WHERE IT CAN COLLECT NATURAL PRECIPITATION WITHOUT INTERFERENCE FROM MAN-MADE OR NATURAL OBSTRUCTIONS. PLACE THE DEVICE AT A HEIGHT THAT DETERS VANDALISM.

E D A

[A] The Boston Building
9 Exchange Place, Suite 1100
Salt Lake City, Utah 84111
[O] 801 531 7600
[E] info@edaarch.com
[W] www.edaarch.com

PROJECT ARCHITECT RG
PROJECT MANAGER EP

LICENSED LANDSCAPE ARCHITECT
Richard L. Gilbert
No. 5734299
April 24, 2024
STATE OF UTAH

Arc Sitio Design, Inc
Landscape Architecture & Architectural Site Design
1058 East 2100 South Salt Lake City, Utah 84106
office 801 . 487 . 4923 www.arcsitiodesign.com

WASATCH COUNTY
COURTS EXPANSION

1361 US-40
HEBER CITY, UT 84032

PROJECT NUMBER		XXXXXX
#	DESCRIPTION	DATE
1	PERMIT REVIEW SET	04.24.24

IRRIGATION NOTES

L-R100

23 MAY 2024 ©EDA

E:\23040_Wasatch Courts Expansion\Cadd\L-IRR.dwg May 06, 2024 - 9:08am
Plot Scale:

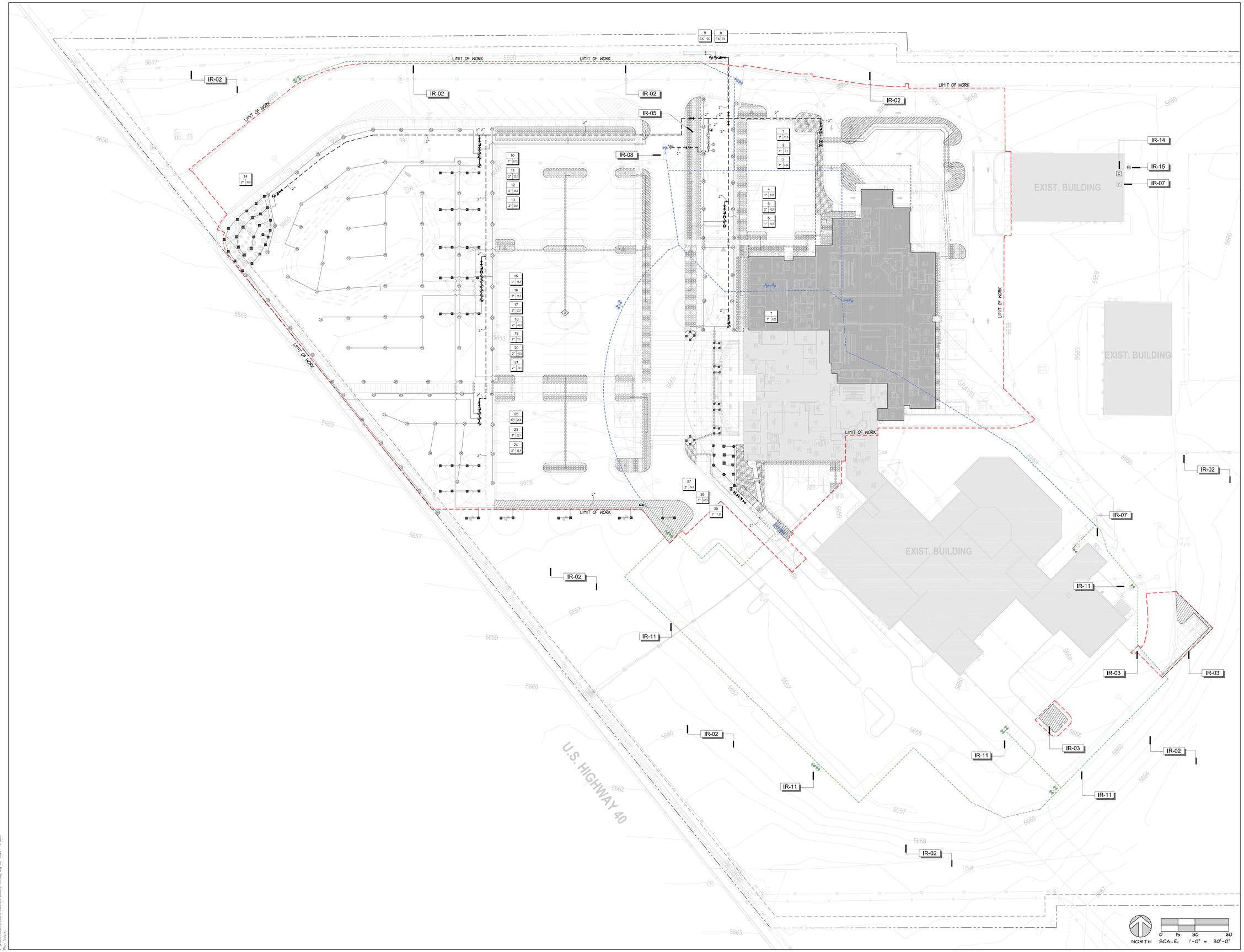

E D A

[A] The Boston Building
9 Exchange Place, Suite 1100
Salt Lake City, Utah 84111

[O] 801 531 7600

[E] info@edaarch.com

[W] www.edaarch.com

PROJECT ARCHITECT	RG
PROJECT MANAGER	EP

LICENSED LANDSCAPE ARCHITECT
Richard L. Gilbert
No. 5734299
April 24, 2024
STATE OF UTAH

Arc Sitio Design, Inc
Landscape Architecture & Architectural Site Design
1058 East 2100 South Salt Lake City, Utah 84106
office 801 . 487 . 4923 www.arcsitiodesign.com

WASATCH COUNTY COURTS EXPANSION

1361 US-40
HEBER CITY, UT 84032

PROJECT NUMBER		XXXXXX
#	DESCRIPTION	DATE
1	PERMIT REVIEW SET	04.24.24

IRRIGATION PLAN

L-R101

23 MAY 2024

© EDA

E:\2300_Wasatch Court's Expansion\Cad\L-RR.dwg May 09, 2024 - 9:08am
Plot: 1=30

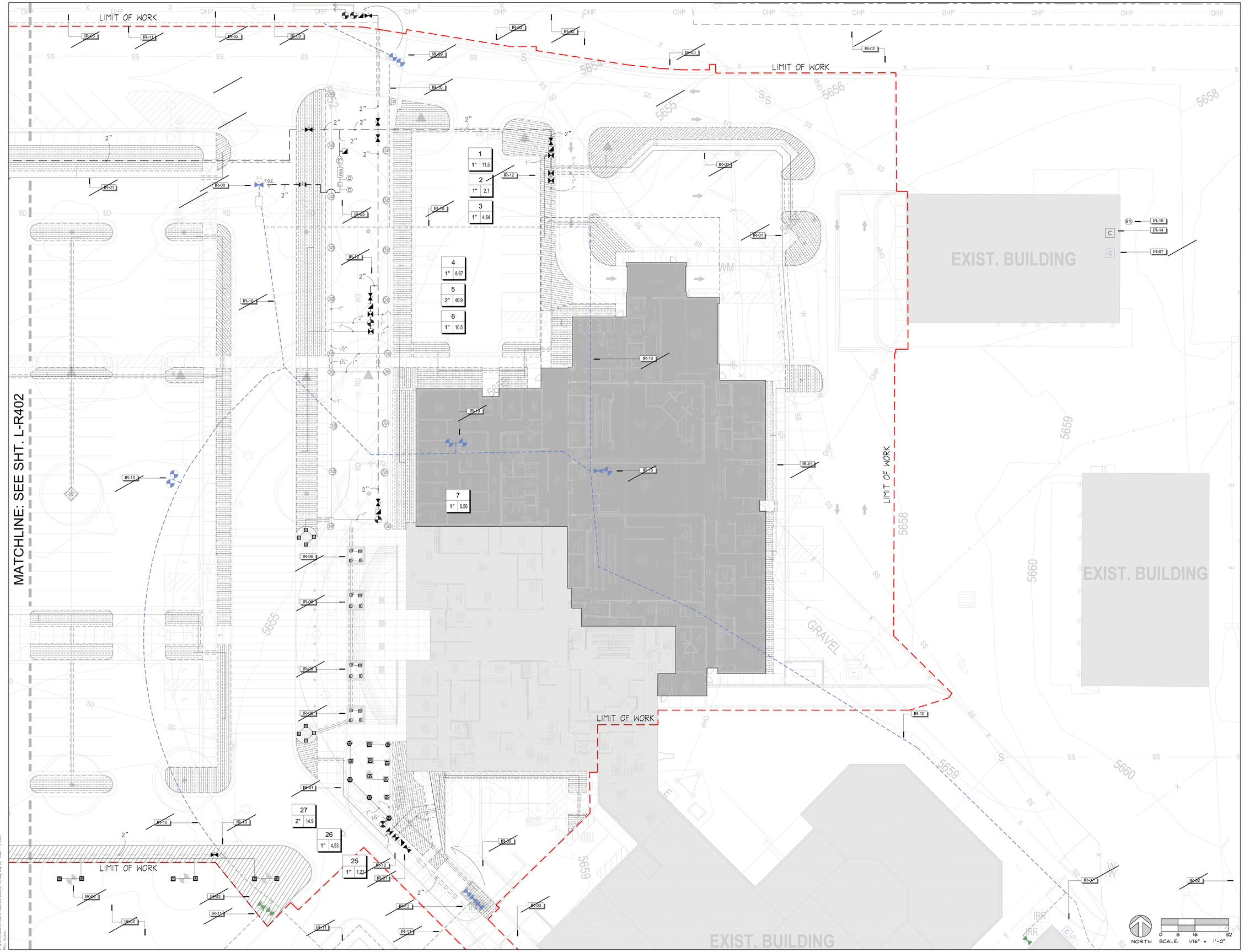

E D A

[A] The Boston Building
9 Exchange Place, Suite 1100
Salt Lake City, Utah 84111

[O] 801 531 7600

[E] info@edaarch.com

[W] www.edaarch.com

PROJECT ARCHITECT RG
PROJECT MANAGER EP

LICENSED LANDSCAPE ARCHITECT
Richard L. Gilbert
No. 5734299
April 24, 2024
STATE OF UTAH

Arc Sitio Design, Inc
Landscape Architecture & Architectural Site Design
1058 East 2100 South Salt Lake City, Utah 84106
office 801 . 487 . 4923 www.arcsitiodesign.com

WASATCH COUNTY
COURTS EXPANSION

1361 US-40
HEBER CITY, UT 84032

PROJECT NUMBER		XXXXXX
#	DESCRIPTION	DATE
1	PERMIT REVIEW SET	04.24.24

ENLARGED IRRIGATION PLAN

L-R401

23 MAY 2024 © EDA

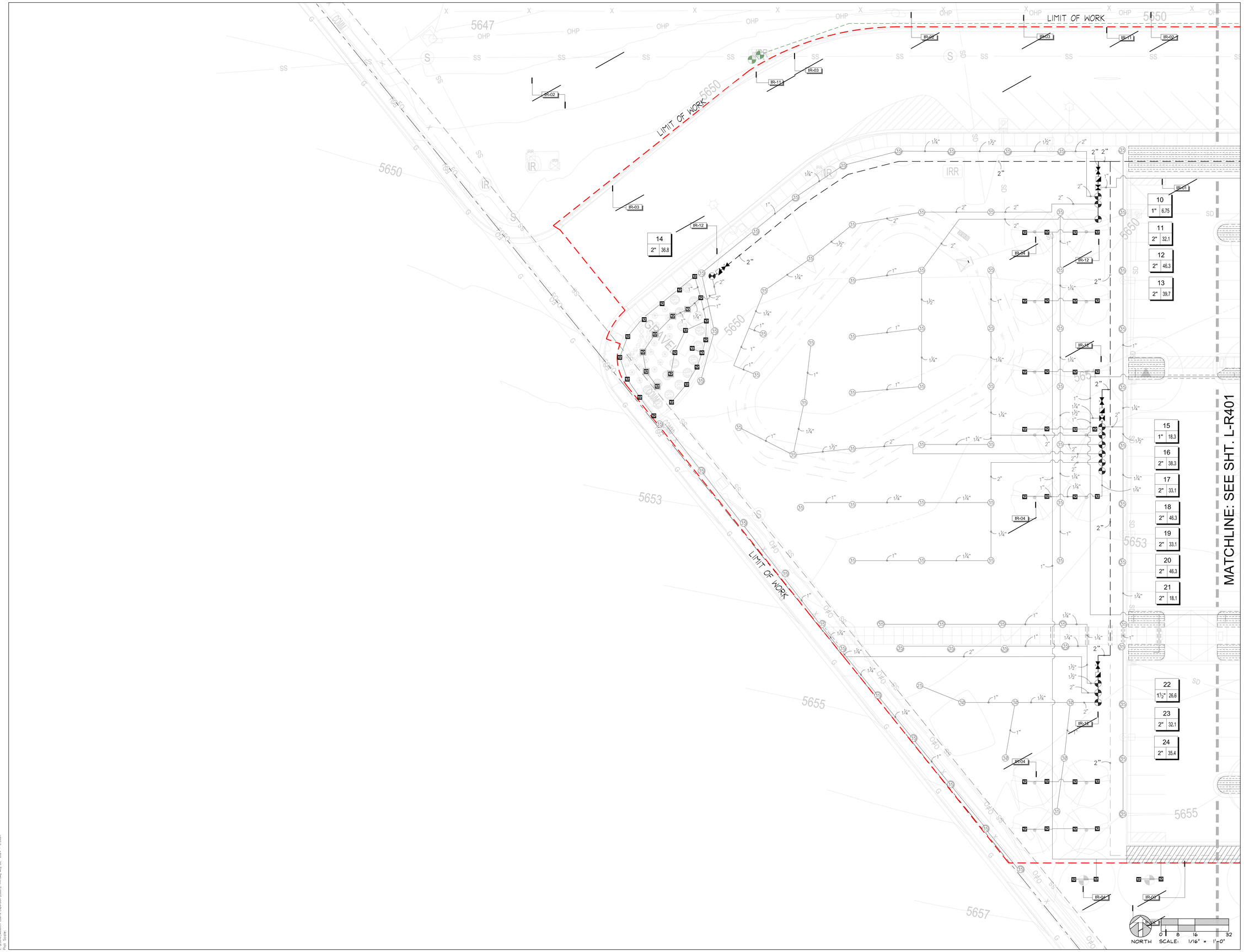

E D A

[A] The Boston Building
9 Exchange Place, Suite 1100
Salt Lake City, Utah 84111

[O] 801 531 7600

[E] info@edaarch.com

[W] www.edaarch.com

PROJECT ARCHITECT RG
PROJECT MANAGER EP

LICENSED LANDSCAPE ARCHITECT
Richard L. Gilbert
No. 5734299
April 24, 2024
STATE OF UTAH

Arc Sitio Design, Inc
Landscape Architecture & Architectural Site Design
1058 East 2100 South Salt Lake City, Utah 84106
office 801 . 487 . 4923 www.arcsitiodesign.com

WASATCH COUNTY
COURTS EXPANSION

1361 US-40
HEBER CITY, UT 84032

PROJECT NUMBER XXXXXX

#	DESCRIPTION	DATE
1	PERMIT REVIEW SET	04.24.24

ENLARGED IRRIGATION PLAN

L-R402

23 MAY 2024

© EDA

E:\2040_Wasatch Courts Expansion\Cadd\L-R06.dwg May 06, 2024 - 9:09am
Kyle Sorg

E D A

INSTALLATION CHART

REFER TO THE FOLLOWING TABLE WHICH LISTS THE NUMBER OF BOLTS, SIZE, AND TORQUE FOR EACH BOLT IN REFERENCE TO THE SIZE OF PIPE WHICH IS BEING RESTRAINED.

AS AN EXAMPLE, IF YOU HAVE A 3" PIPE, YOU WILL NEED 2 BOLTS THAT ARE 3/8 X 2.5" AND TIGHTEN THEM WITH A TORQUE WRENCH TO 20 FT-LBS.

PIPE SIZE	NO. BOLTS	BOLT SIZE	TORQUE FT-LBS.
3"	2	3/8" x 2.5"	20
4"	2	1/2" x 3"	50
6"	2	1/2" x 3.5"	50
8"	4	1/2" x 4"	50
10"	4	5/8" x 5.5"	100
12"	4	5/8" x 5.5"	100

INSTALL JOINT RESTRAINTS ON ALL PIPE AND FITTINGS 3" DIA. AND LARGER

DISTANCE CHART

REFER TO THE FOLLOWING TABLE THAT LISTS THE LENGTH (IN FEET) FOR EACH SIZE/TYPE FITTING WITHIN WHICH ALL JOINTS JUST BE RESTRAINED. ALL FITTINGS AND JOINT RESTRAINTS SHALL BE INSTALLED PER MANUFACTURERS RECOMMENDATIONS & SPECIFICATIONS.

AS AN EXAMPLE, IF YOU ARE INSTALLING A 3" MAINLINE WITH A DIRECTIONAL CHANGE OF 90°, REFER TO CHART UNDER PIPE SIZE TO 3" AND UNDER BENDS 90 YOU WILL SEE THE DISTANCE OF 11'. IF THERE IS ANY JOINT (VALVE, BELL, ETC.) YOU MUST INSTALL A JOINT RESTRAINT WITHIN 11' OF THE 90° MAINLINE DIRECTIONAL CHANGE.

PIPE SIZE	BENDS				REDUCERS			DEAD END	
	11°	22°	45°	90°	1 STEP	2 STEP	3 STEP	BLIND	SERV. B.
3"	2'	3'	6'	11'	8'	10'	-	30'	15'
4"	2'	4'	9'	20'	14'	20'	31'	45'	25'
6"	3'	6'	13'	29'	30'	40'	53'	63'	40'
8"	4'	8'	15	38'	33'	55'	63'	75'	70'
10"	5'	9'	19'	45'	36'	56'	75'	96'	90'
12"	5'	10'	21'	53'	38'	60'	83'	112'	110'

THESE CHARTS ARE BASED ON USE OF LEEMCO PRODUCTS, AND PROVIDED AS REFERENCE ONLY. CONTRACTOR SHALL CONTACT CORRESPONDING MANUFACTURER REPRESENTATIVE FOR PROPER CHARTS, TRAINING AND CERTIFICATION IF OTHER PRODUCTS ARE SUBMITTED AND APPROVED. FOR USE OF LEEMCO PRODUCTS, CONTACT TONY GARNER @ (208) 631-7787, THE LEEMCO REPRESENTATIVE, FOR ALL QUESTIONS CONCERNING LEEMCO PRODUCTS.

M JOINT RESTRAINT TABLES

SCALE: NTS — NOTES/TABLES

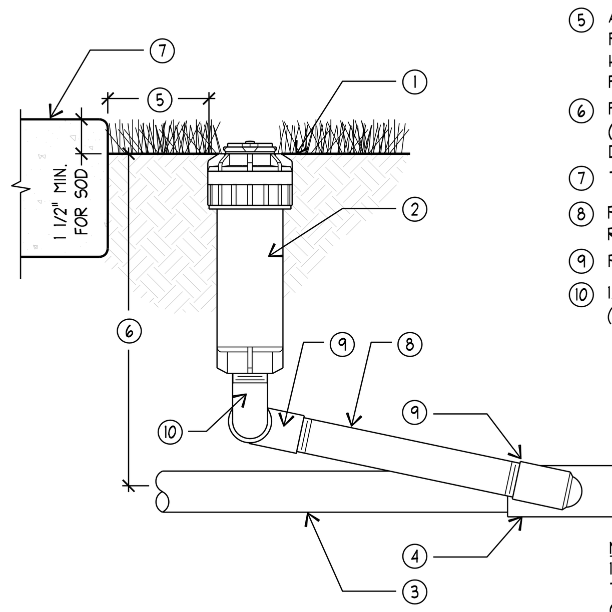

1. SET HEAD FLUSH WITH FINISH GRADE/TOP OF MULCH
2. POP-UP ROTOR HEAD (SEE IRRIGATION SCHEDULE)
3. LATERAL PIPING (SIZE AS PER PLAN)
4. PVC SCH 40 TEE OR ELL
5. ALL ROTOR HEADS TO BE PLACED 2" CLEAR OF ALL HARDSCAPE SURFACES AND 2'-0" FROM BUILDINGS
6. FOR TRENCH DEPTHS (TRENCHING AND SLEEVING DETAIL)
7. TOP OF HARDSCAPE
8. PVC SCH 80 NIPPLE (LENGTH AS REQUIRED)
9. PVC SCH 40 STREET ELL
10. 1/2-INCH MARLEX STREET ELL (RAIN BIRD OR TORO)

NOTE:
1. SWING PIPE SHALL SLOPE TOWARDS LATERAL PIPE FOR COMPLETE DRAINAGE.
2. USE ON 7 GPM OR MORE.

I POP-UP ROTOR HEAD

SCALE: NTS — SECTION

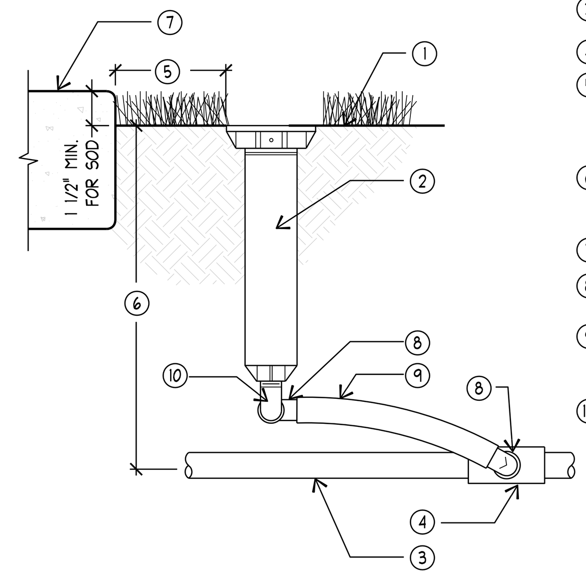

1. SET HEAD FLUSH WITH FINISH GRADE/TOP OF MULCH
2. POP-UP SPRAY HEAD (SEE IRRIGATION SCHEDULE)
3. LATERAL PIPING (SIZE AS PER PLAN)
4. PVC SCH 40 TEE OR ELL
5. ALL SPRAY HEADS TO BE PLACED 2" CLEAR OF ALL HARDSCAPE SURFACES AND 2'-0" FROM BUILDINGS
6. FOR TRENCH DEPTHS (SEE TRENCHING AND SLEEVING DETAIL)
7. TOP OF HARDSCAPE
8. 1/2-INCH SWING PIPE ELL (RAIN BIRD OR TORO)
9. 1/2-INCH POLYETHYLENE SWING PIPE, MIN. 12" OR AS LENGTH NEEDED (RAIN BIRD OR TORO)
10. 1/2-INCH MARLEX STREET ELL (RAIN BIRD OR TORO)

NOTE:
1. SWING PIPE SHALL SLOPE TOWARDS LATERAL PIPE FOR COMPLETE DRAINAGE.

H POP-UP SPRAY HEAD

SCALE: NTS — SECTION

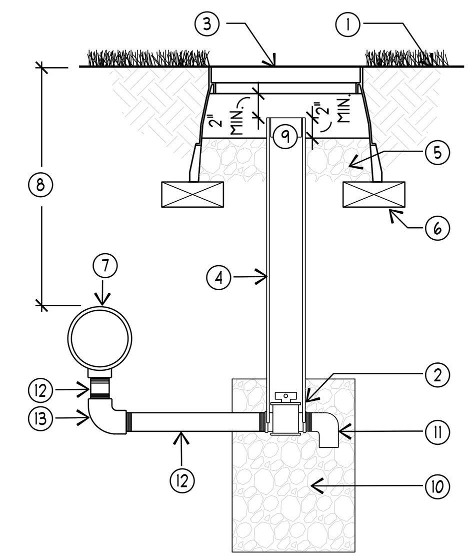

1. SET FLUSH TO FINISH GRADE/TOP OF MULCH
2. 3/4" MAINLINE DRAIN VALVE (SEE IRRIGATION SCHEDULE)
3. 8" ROUND VALVE BOX (SEE SPECS.)
4. 4" SCH 40 PVC SLEEVE (LENGTH AS REQUIRED). NOTCH OVER VALVE FOR STABILITY.
5. 6-INCH MINIMUM DEPTH OF 3/4-INCH WASHED AGGREGATE
6. BRICK FOUNDATION
7. MAINLINE PIPING (SIZE AS PER PLAN)
8. FOR TRENCH DEPTHS (SEE TRENCHING AND SLEEVING DETAIL)
9. WEATHERMATIC 906L LOCKING VALVE CAP WITH A RLK-1 KEY OR EQUAL
10. GRAVEL SUMP- 18" DIA. X 12" DEEP
11. SCH. 80 PVC STREET ELL TURNED DOWNWARDS
12. PVC SCH 80 NIPPLE (LENGTH AS REQUIRED)
13. PVC SCH 80 ELL

E MAINLINE DRAIN ASSEMBLY

SCALE: NTS

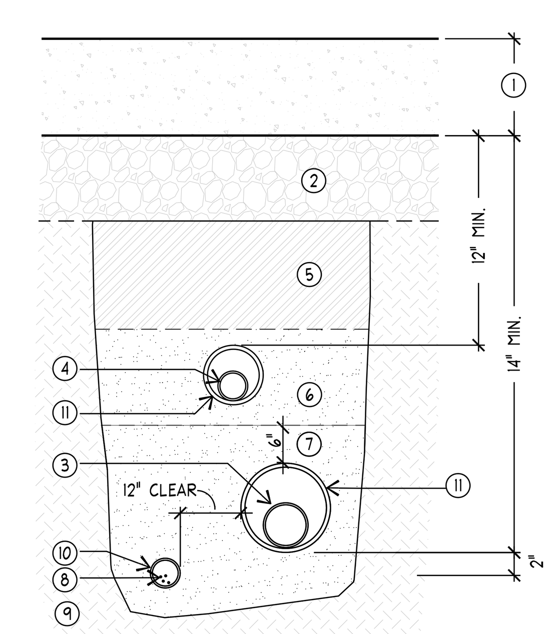

1. HARDSCAPE PAVING
2. COMPACTED AGGREGATE SUB-BASE
3. MAINLINE PIPING - MIN. DEPTH 18" TO TOP OF PIPE
4. LATERAL PIPING
5. USE EXCAVATED TRENCH MATERIAL NOT TO EXCEED 1" DIA. ROCKS
6. BEDDING SAND- IN CASES WHERE LATERAL PIPING IS INSTALLED IN MAINLINE TRENCH, USE SAND TO BACKFILL TRENCH
7. BEDDING SAND- IN CASES WHERE LATERAL PIPING IS INSTALLED IN MAINLINE TRENCH, USE SAND TO BACKFILL TRENCH SO THAT THE LATERAL LINE IS 12" BELOW FINISH GRADE.
8. IRRIGATION CONTROL WIRES - NO OTHER UTILITIES MAY BE BURIED IN THE SAME TRENCH AS IRRIGATION.
9. COMPACTED SUBGRADE
10. ELECTRICAL CONDUIT- SEE SPECS.
11. SLEEVING: -SLEEVES SHALL BE 2" LARGER THAN THE PIPE OR WIRES WITHIN -4" AND LARGER = PVC CLASS 200

NOTE:
1. SETTLE ALL TRENCHES WITH WATER PRIOR TO INSTALLATION OF TOPSOIL.
2. EXTEND ALL SLEEVING 18" MIN. BEYOND EDGE OF PAVING.
3. MIN. 6" DISTANCE BETWEEN EACH PIPE.
3. MARK THE LOCATION OF EACH SLEEVE BY INSTALLING A MAGNETIZED MASONRY NAIL, FLUSH WITH THE HARDSCAPE, INDICATING THE LOCATION OF EACH END OF THE SLEEVE.

A SLEEVING

SCALE: NTS — SECTION

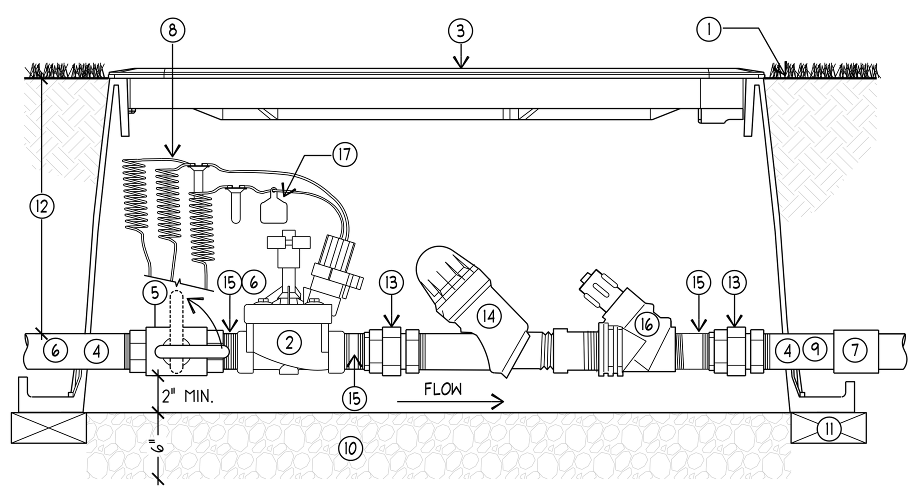

ALL VALVE BOX LIDS ARE TO BE BRANDED WITH 3" TALL LETTERING. '00-00' FOR CLOCK & VALVE # ON RCV'S, 'WS' FOR WIRE SPLICE. 'BV' FOR BALL VALVE. 'S & W' FOR STOP & WASTE. 'LV' FOR LINE VALVE. 'QC' FOR QUICK COUPLER, 'DV' FOR DRAIN VALVE, 'HB' FOR HOSE BIB. COORDINATE WITH OWNER FOR CLOCK AND VALVE #.

1. SET FLUSH TO FINISH GRADE/TOP OF MULCH
2. ELECTRIC REMOTE-CONTROL VALVE (SEE IRRIGATION SCHEDULE)
3. VALVE BOX (SEE SPECS.)
4. PVC SCH 80 TOE NIPPLE WITH SXS FITTING (LENGTH AS REQUIRED)
5. ISOLATION BALL VALVE (SEE IRRIGATION SCHEDULE) ASSOCIATE WITH VALVE MANIFOLDS AS INDICATED ON THE PLANS
6. MAINLINE PIPING (SIZE AS PER PLAN)
7. PVC SCH 80 SLIP X SLIP COUPLING OR BELL END OF PIPE
8. CONTROL WIRES- 30-INCH LINEAR LENGTH OF WIRE, COILED
9. LATERAL PIPING (SIZE AS PER PLAN)
10. 6-INCH MINIMUM DEPTH OF 1-INCH WASHED AGGREGATE
11. BRICK FOUNDATION, TYP.
12. FOR TRENCH DEPTHS (SEE TRENCHING AND SLEEVING DETAIL)
13. PVC SCH. 80 UNION
14. DISK FILTER (SEE IRRIGATION SCHEDULE)
15. PVC SCH. 80 NIPPLE; LENGTH AS REQUIRED (TYP.)
16. INLINE PRESSURE REGULATOR VALVE (SEE IRRIGATION LEGEND)
17. VALVE TAG - COORDINATE WITH U OF U GROUNDS DEPT.

NOTES:
1. LOCATE ALL VALVE BOXES IN PLANTER BEDS UNLESS OTHERWISE INDICATED. MAINTAIN 3 FEET AWAY FROM THE HARDSCAPE.
2. ALL FITTINGS AND NIPPLES IN MANIFOLD SHALL BE SCH. 80 THREADED PVC USING TEFLON TAPE.
3. VALVE MANIFOLD TO BE INSTALLED GOING AWAY FROM MAIN SUPPLY LINE. MINIMUM OF 1 FOOT BEFORE CHANGE IN DIRECTION.
4. CUT ALL VALVE BOXES AS REQUIRED SO BOXES DO NOT SIT ON PIPING.

J ELECTRIC REMOTE CONTROL VALVE W/ DISC FILTER & PRV

SCALE: NTS — SECTION

NOTE:
1. INSTALL FILTER PER MANUFACTURERS SPECIFICATIONS.
2. CONFORM TO CITY STANDARDS AND AWWA CODES WHEN CONNECTING TO WATER MAIN SUPPLY.
3. ALL STANDPIPES AND BOXES MUST HAVE PROPER PROVISION FOR DRAINING AND FROST PROTECTION.
4. ALL BURIED BOLTS SHALL BE STAINLESS STEEL.
5. CONTRACTOR TO FIELD VERIFY REQUIRED SPATIAL DISTANCES PRIOR TO INSTALLATION .
6. ALL MAINLINE PIPE ABOVE GRADE SHALL BE SCH. 40 GALVANIZED PIPE
7. INSTALL QUICK COUPLER DOWNSTREAM OF FILTER FOR WINTERIZATION PURPOSES

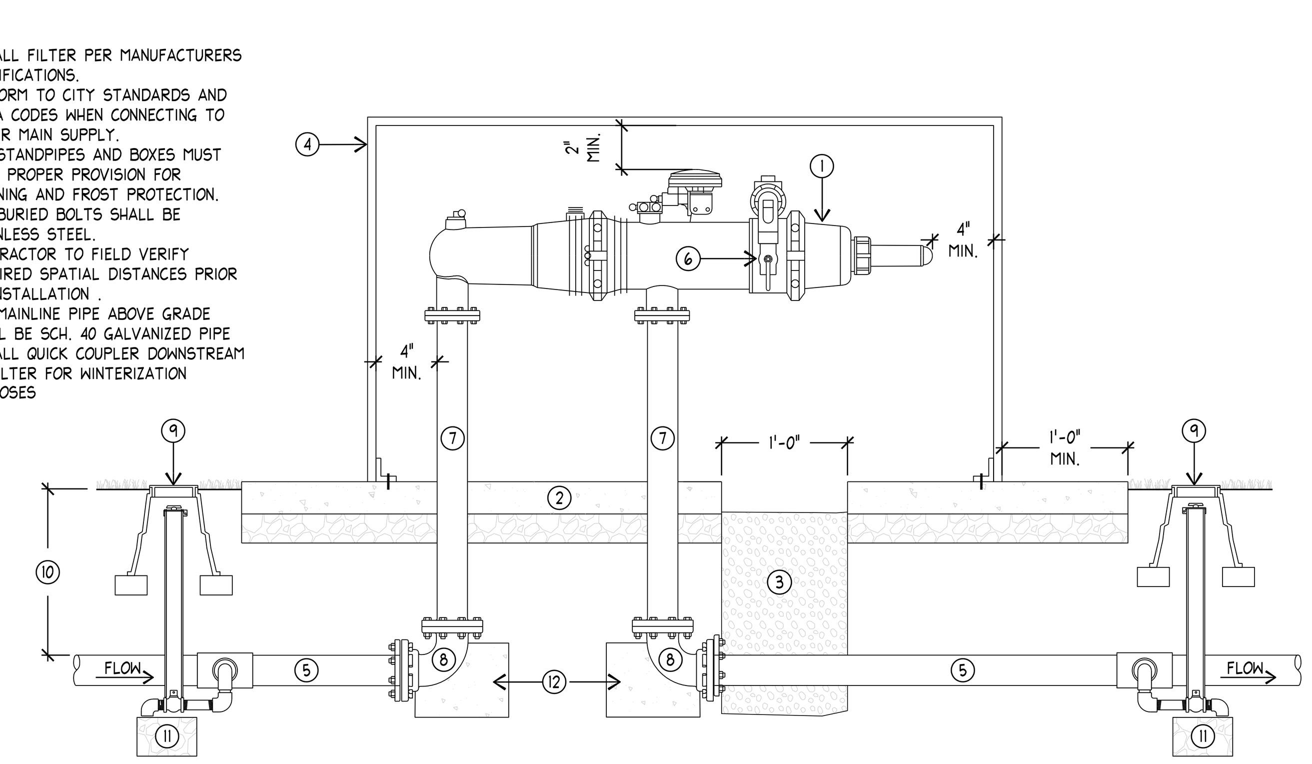

1. INLINE FINE FILTER -SEE IRRIGATION SCHEDULE
2. CONCRETE PAD, 5" MIN. THICKNESS OVER 6" COMPACTED ROAD BASE. SLOPE 0.5% MIN. FOR DRAINAGE. EXTEND CONCRETE 12" BEYOND EDGE OF BOLLARDS
3. 12"-DIA. X 24" DEEP GRAVEL FLUSHING SUMP
4. FILTER ENCLOSURE, SEE IRRIGATION SCHEDULE
5. MAINLINE PIPE
6. CONBRACO 70-105 1" BALL VALVE (OR EQUAL) ON FILTER FLUSHING OUTLET
7. MAINLINE PIPING - SPOOL OR GALVINIZED PIPE (SIZE,PER PLANS)
8. FLXFL 90 (SAME SIZE AS MAINLINE)
9. MAINLINE DRAIN VALVE
10. FOR TRENCH DEPTHS (SEE TRENCHING & SLEEVING DETAIL)
11. 12-INCH MINIMUM DEPTH OF 3/4-INCH WASHED AGGREGATE
12. CONCRETE THRUST BLOCK 1 CU. FT. WRAP PIPES W/ 10 MIL TAPE. COMPACT SUBGRADE TO 95% PRIOR TO POUR.

F INLINE FINE FILTER

SCALE: NTS — SECTION

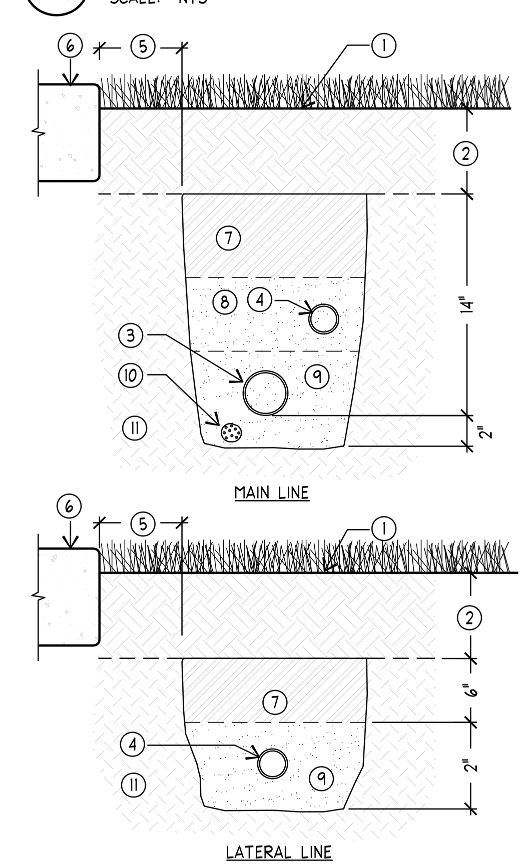

1. FINISH GRADE/TOP OF MULCH
2. TOPSOIL LAYER (6" IN TURF AND 12" IN SHRUB BED)
3. MAINLINE PIPING - MIN. DEPTH 18" TO TOP OF PIPE (SIZE AS PER PLAN)
4. LATERAL PIPING (SIZE AS PER PLAN)
5. LOCATE ALL TRENCHES 12" AWAY FROM ALL BUILDINGS, SIDEWALKS OR ANY HARD SURFACES. 3' FROM ROADS.
6. TOP OF HARDSCAPE
7. USE EXCAVATED TRENCH MATERIAL NOT TO EXCEED 1" DIA. ROCKS
8. BEDDING SAND- IN CASES WHERE LATERAL PIPING IS INSTALLED IN MAINLINE TRENCH, USE SAND TO BACKFILL TRENCH SO THAT THE LATERAL LINE IS 12" BELOW FINISH GRADE.
9. BEDDING SAND- USE SAND TO A DEPTH OF 2" BELOW AND TO THE EITHER SIDE OF PIPING TO BED ALL PVC PIPING AND ELECTRICAL WIRES
10. IRRIGATION CONTROL WIRES - BUNDLE AND TAPE WITH DUCT TAPE EVERY 15 FEET O.C. NO OTHER UTILITIES MAY BE BURIED IN THE SAME TRENCH AS IRRIGATION.
11. COMPACTED SUBGRADE

NOTE:
1. SETTLE ALL TRENCHES WITH WATER PRIOR TO INSTALLATION OF TOPSOIL.
2. MIN. 6" DISTANCE BETWEEN EACH PIPE.

B TRENCHING

SCALE: NTS — SECTION

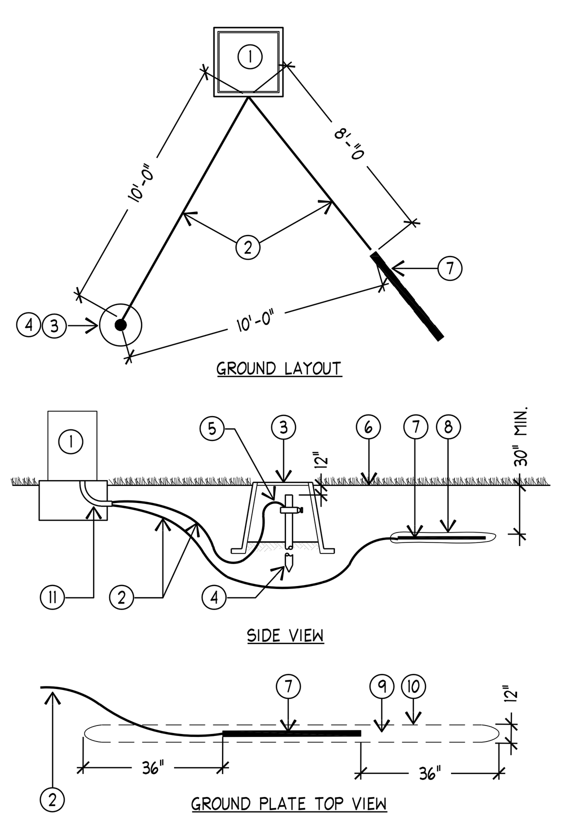

1. IRRIGATION CONTROLLER (EXISTING - FOR REFERENCE ONLY)
2. SOLID BARE COPPER WIRE (#6 AWG) FROM GROUNDING ROD OR GROUNDING PLATE TO CONTROLLER ASSEMBLY. MAKE WIRE AS SHORT AND STRAIGHT AS POSSIBLE
3. COVER GROUNDING ROD WITH #10 ROUND VALVE BOX AS SHOWN
4. 5/8-INCH X 10 FT COPPER CLAD GROUNDING ROD.
5. CADWELD CONNECTION
6. FINISH GRADE
7. COPPER GROUND PLATE (4" X 96" X .0625") ATTACHED TO #6 AWG BARE COPPER WIRE W/ CADWELD CONNECTION OR APPROVED EQUAL
8. EARTH CONTACT MATERIAL
9. DO NOT INSTALL ANY OTHER WIRES OR CABLE WITHIN THE SPHERE OF INFLUENCE
10. ELECTRODE SPHERE OF INFLUENCE BOUNDARIES
11. PLASTIC SWEEP ELL (1 1/2" OR LARGER)

NOTE:
1. INSTALL PER MANUFACTURE'S SPECIFICATIONS.
2. TEST GROUNDING 1 MONTH AFTER INSTALLATION. GROUNDING MUST ACHIEVE RESISTANCE OF TEN (10) OHMS OR LESS.

N GROUNDING GRID Y DESIGN LAYOUT

SCALE: NTS — PLAN/SECTION

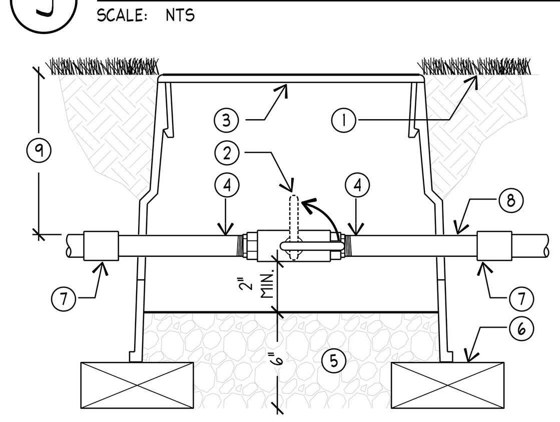

1. SET FLUSH TO FINISH GRADE / TOP OF MULCH
2. ISOLATION BALL VALVE (SEE IRRIGATION SCHEDULE)
3. STANDARD VALVE BOX (SEE SPECS.).
4. PVC SCH 80 TOE NIPPLE
5. 6-INCH MINIMUM DEPTH OF 1-INCH WASHED AGGREGATE
6. BRICK FOUNDATION
7. PVC SCH 80 SLIP X SLIP COUPLING OR BELL END OF PIPE
8. MAINLINE PIPING
9. FOR TRENCH DEPTHS (SEE TRENCHING AND SLEEVING DETAIL)

K ISOLATION BALL VALVE ASSEMBLY

SCALE: NTS — SECTION

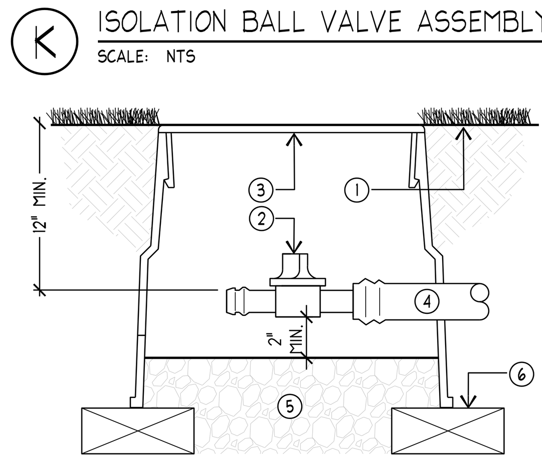

1. SET FLUSH TO FINISH GRADE/TOP OF MULCH
2. LINE FLUSHING VALVE - NETAFIM TLSOV
3. 10 INCH ROUND VALVE BOX
4. DRIPLINE TUBING
5. 12-INCH MINIMUM DEPTH OF 1-INCH WASHED AGGREGATE
6. BRICK FOUNDATION

NOTES:
1. PLACE MANUAL LINE FLUSHING VALVES AT EACH DEAD END, AND LOW POINT IN THE SYSTEM.

L MANUAL LINE FLUSHING VALVE ASSEMBLY

SCALE: NTS — SECTION

NOTE
REPRESENTATIVE SAMPLING OF FITTINGS WITH JOINT RESTRAINTS INSTALLED. PIPE TO PIPE RESTRAINTS SHOWN, NOT NECESSARILY ALWAYS REQUIRED. REFER TO JOINT RESTRAINT TABLES.

1. REDUCER BUSHING WITH RESTRAINT
2. TEE WITH 3 RESTRAINTS
3. PIPE TO PIPE RESTRAINT
4. VALVE WITH RESTRAINT
5. ELBOW WITH RESTRAINT
6. CAP WITH RESTRAINT

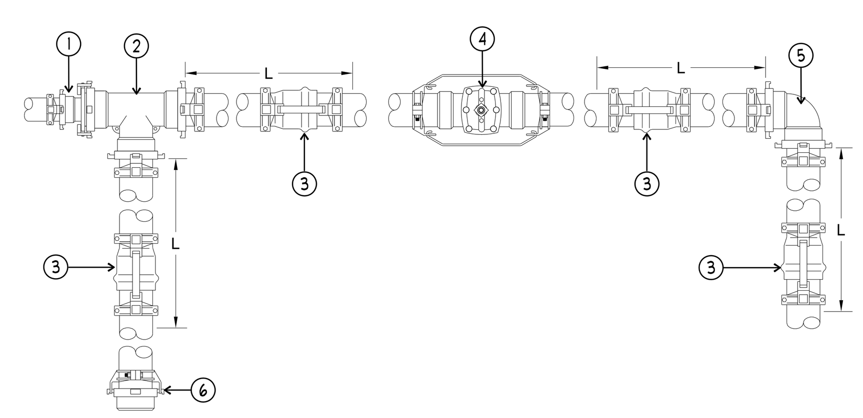

INSTALL JOINT RESTRAINTS ON ALL PIPE AND FITTINGS 3" DIA. AND LARGER

O TYPICAL JOINT RESTRAINT LAYOUT

SCALE: NTS — PLAN

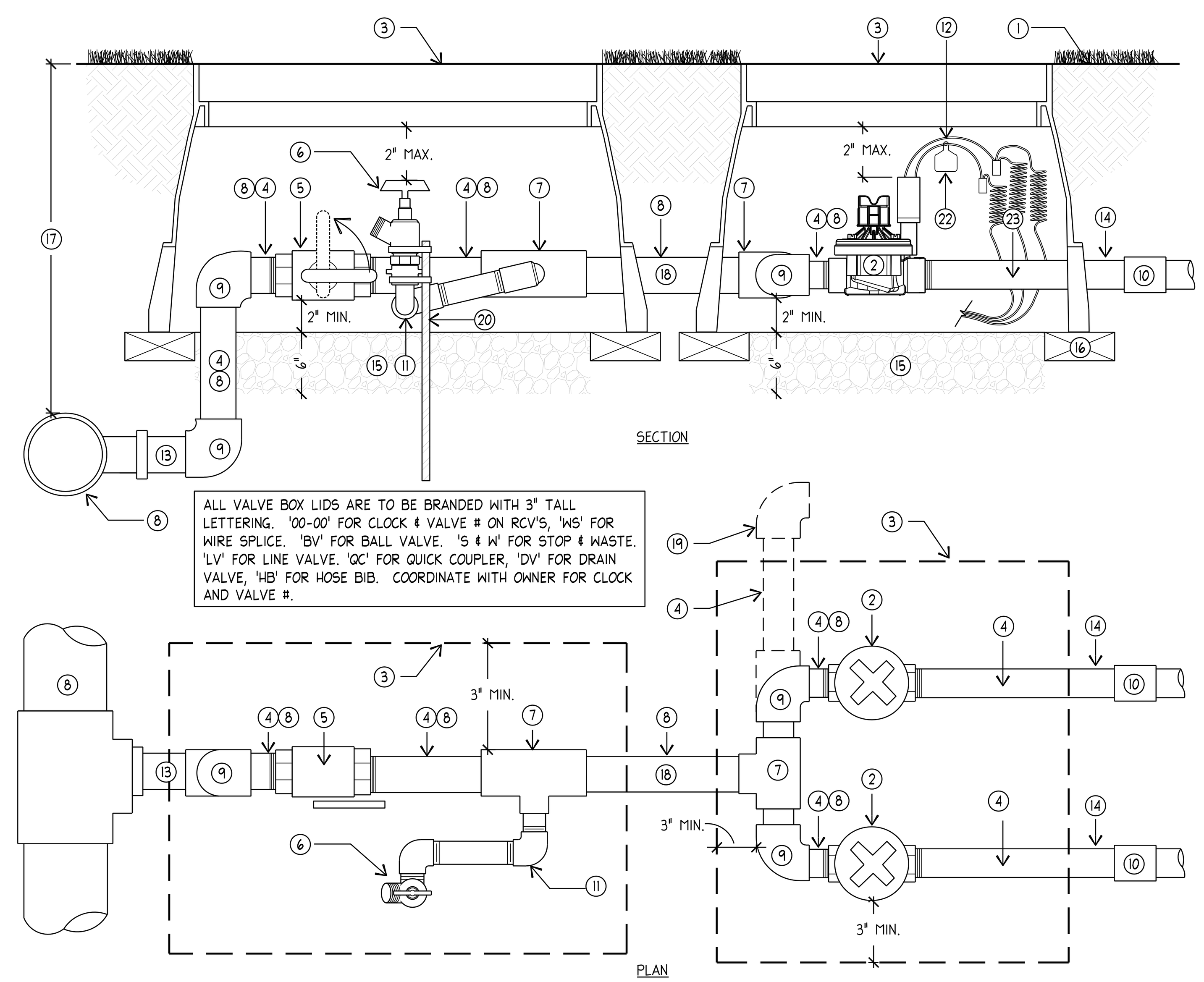

ALL VALVE BOX LIDS ARE TO BE BRANDED WITH 3" TALL LETTERING. '00-00' FOR CLOCK & VALVE # ON RCV'S, 'WS' FOR WIRE SPLICE. 'BV' FOR BALL VALVE. 'S & W' FOR STOP & WASTE. 'LV' FOR LINE VALVE. 'QC' FOR QUICK COUPLER, 'DV' FOR DRAIN VALVE, 'HB' FOR HOSE BIB. COORDINATE WITH OWNER FOR CLOCK AND VALVE #.

1. SET FLUSH TO FINISH GRADE/TOP OF MULCH
2. ELECTRIC REMOTE-CONTROL VALVE (SEE IRRIGATION SCHEDULE)
3. VALVE BOX (SEE SPECS.)
4. PVC SCH 80 TOE NIPPLE WITH SXS FITTING (LENGTH AS REQUIRED)
5. ISOLATION BALL VALVE (SEE IRRIGATION SCHEDULE) ASSOCIATE WITH VALVE MANIFOLDS AS INDICATED ON THE PLANS
6. INVERTED HOSE BIB (SEE IRRIGATION SCHEDULE AND DETAIL - SIMILIAR) ASSOCIATE WITH VALVE MANIFOLDS AS INDICATED ON THE PLANS
7. PVC SCH 80 TEE S X S X S (SAME SIZE AS MAINLINE PIPING)
8. MAINLINE PIPING (SIZE AS PER PLAN)
9. PVC SCH. 80 S X S ELBOW
10. PVC SCH 80 SLIP X SLIP COUPLING OR BELL END OF PIPE
11. 1" MIP X MIP PREFABRICATED SWING JOINT BRASS INSERT WITH STABILIZER ELBOW
12. CONTROL WIRES- 30-INCH LINEAR LENGTH OF WIRE, COILED
13. PVC SCH 80 NIPPLE WITH BUSHING (LENGTH AS REQUIRED)
14. LATERAL PIPING (SIZE AS PER PLAN)
15. 6-INCH MINIMUM DEPTH OF 1-INCH WASHED AGGREGATE
16. BRICK FOUNDATION, TYP.
17. FOR TRENCH DEPTHS (SEE TRENCHING AND SLEEVING DETAIL)
18. PVC SCH 80 PIPE (LENGTH AS REQUIRED)
19. EXTEND FOR NUMBER OF VALVES REQUIRED
20. PREFABRICATED - QUICK COUPLER STABLIZER - SPEARS, LEEMCO OR APPROVED EQUAL
22. VALVE TAG - COORDINATE WITH U OF U GROUNDS DEPT.
23. PVC SCH. 80 NIPPLE (LENGTH AS REQUIRED)

NOTES:
1. LOCATE ALL VALVE BOXES IN PLANTER BEDS UNLESS OTHERWISE INDICATED. MAINTAIN 3 FEET AWAY FROM THE HARDSCAPE.
2. ALL FITTINGS AND NIPPLES IN MANIFOLD SHALL BE SCH. 80 THREADED PVC USING TEFLON TAPE.
3. VALVE MANIFOLD TO BE INSTALLED GOING AWAY FROM MAIN SUPPLY LINE. MINIMUM OF 1 FOOT BEFORE CHANGE IN DIRECTION.
4. CUT ALL VALVE BOXES AS REQUIRED SO BOXES DO NOT SIT ON PIPING.

G ELECTRIC REMOTE-CONTROL VALVE ASSEMBLY

SCALE: NTS — SECTION/PLAN

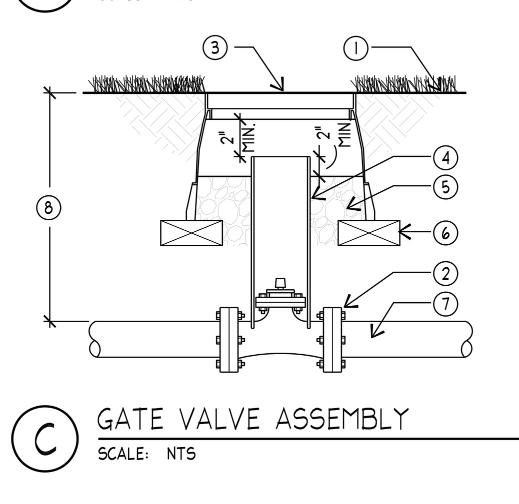

1. SET FLUSH TO FINISH GRADE/TOP OF MULCH
2. GATE VALVE (SEE IRRIGATION SCHEDULE)
3. 10" ROUND VALVE BOX (SEE SPECS.).
4. 6" SCH 40 PVC SLEEVE (LENGTH AS REQUIRED). NOTCH OVER VALVE FOR STABILITY.
5. 6-INCH MINIMUM DEPTH OF 3/4-INCH WASHED AGGREGATE
6. BRICK FOUNDATION
7. MAINLINE PIPING (SIZE AS PER PLAN)
8. FOR TRENCH DEPTHS (SEE TRENCHING AND SLEEVING DETAIL)

C GATE VALVE ASSEMBLY

SCALE: NTS — SECTION

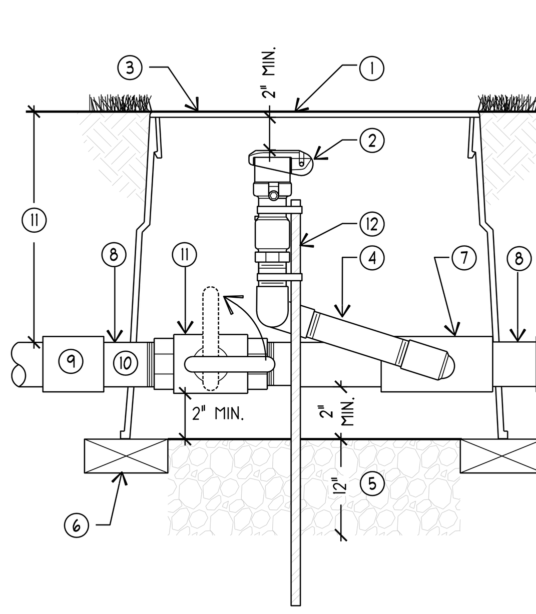

1. SET FLUSH TO FINISH GRADE/TOP OF MULCH
2. QUICK-COUPLING VALVE (SEE IRRIGATION SCEDULE)
3. STANDARD VALVE BOX (SEE SPECS.)
4. 1" MIP X MIP PREFABRICATED SWING JOINT
5. 12-INCH MINIMUM DEPTH OF 1-INCH WASHED AGGREGATE
6. BRICK FOUNDATION
7. PVC SCH 80 SLIP X SLIP X THREAD TEE (SAME SIZE AS MAINLINE PIPING)
8. PVC SCH 80 PIPE
9. PVC SCH 80 SLIP X SLIP COUPLING OR BELL END OF PIPE
10. MAINLINE PIPING (SIZE AS PER PLAN)
11. ISOLATION BALL VALVE (SEE IRRIGATION SCHEDULE)
11. FOR TRENCH DEPTHS (SEE TRENCHING AND SLEEVING DETAIL)
12. PREFABRICATED - QUICK COUPLER STABLIZER - SPEARS, LEEMCO OR APPROVED EQUAL

D QUICK COUPLER VALVE ASSEMBLY

SCALE: NTS — SECTION

[A] The Boston Building
9 Exchange Place, Suite 1100
Salt Lake City, Utah 84111
[O] 801 531 7600
[E] info@edaarch.com
[W] www.edaarch.com

PROJECT ARCHITECT RG
PROJECT MANAGER EP

LICENSED LANDSCAPE ARCHITECT
Richard L. Gilbert
No. 5734299
April 24, 2024
STATE OF UTAH

Arc Sitio Design, Inc
Landscape Architecture & Architectural Site Design
1058 East 2100 South Salt Lake City, Utah 84106
office 801 . 487 . 4923 www.arcsitiodesign.com

WASATCH COUNTY
COURTS EXPANSION

1361 US-40
HEBER CITY, UT 84032

PROJECT NUMBER		XXXXXX
#	DESCRIPTION	DATE
1	PERMIT REVIEW SET	04.24.24

IRRIGATION DETAILS

L-R501

23 MAY 2024

©EDA

E:\23040_Wasatch Courts Expansion\Cadd\L-IRR.dwg May 06, 2024 - 9:09am
Plot Scale:

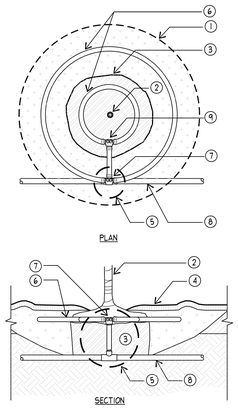

1. TURF EDGE (IF IN TURF)
2. TREE /SHRUB TRUNK
3. ROOTBALL
4. MULCH- SEE LANDSCAPE DWGS.
5. TECHLINE START CONNECTION
6. TECHLINE TUBING
7. TECHLINE 180 3-WAY TEE
8. LATERAL PIPING- POLY PIPE OR PVC PIPE (SIZE AS PER PLAN)
9. TECHLINE 3-WAY TEE

NOTES:
1. ADD LINE FLUSHING VALVE PLUMBED TO TECHLINE TO EACH HEADER GROUPING.

D DRIP TREE RING

SCALE: NTS — PLAN/SECTION

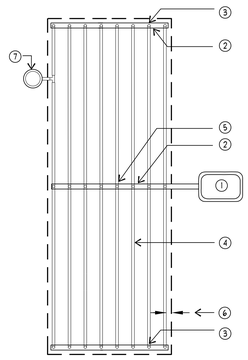

1. ELECTRIC REMOTE CONTROL VALVE WITH DISC FILTER AND PRV - REFER TO IRRIGATION SCHEDULE
2. DRIPLINE START CONNECTION MALE ADAPTER
3. 1" PVC EXHAUST HEADER OR FOOTER, NO SMALLER THAN 1"
4. DRIPLINE TUBING - REFER TO IRRIGATION SCHEDULE TYPE AND SPACING
5. 1" PVC SUPPLY EXHAUST PIPE, NO SMALLER THAN 1"
6. PERIMETER LATERALS 2" TO 4" FROM EDGE
7. LINE FLUSHING VALVE PLACE MANUAL LINE FLUSHING VALVES AT EACH DEAD END, AND LOW POINT IN THE SYSTEM.

NOTES:
1. SOIL STAPLES: ANCHOR THE DRIP TUBING WITH STAINLESS STEEL SOIL STAPLES EVERY 4 FEET. USE TWO SOIL STAPLES AT EACH TEE, ELBOW OR CROSS.

A DRIPLINE TYPICAL PLANTER LAYOUT

SCALE: NTS — PLAN

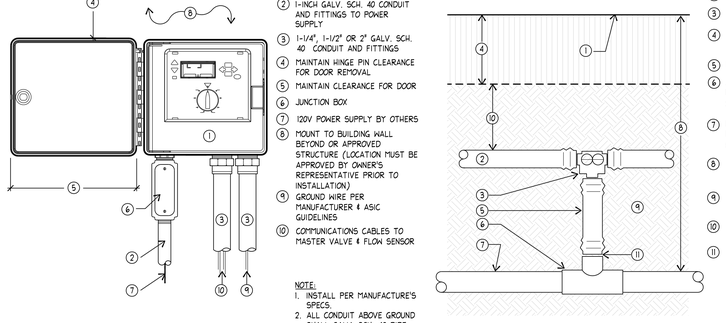

1. WALL MOUNTED IRRIGATION CONTROLLER (SEE IRRIGATION SCHEDULE)
2. 1-INCH GALV. SCH. 40 CONDUIT AND FITTINGS TO POWER SUPPLY
3. 1-1/4", 1-1/2" OR 2" GALV. SCH. 40 CONDUIT AND FITTINGS
4. MAINTAIN HINGE PIN CLEARANCE FOR DOOR REMOVAL
5. MAINTAIN CLEARANCE FOR DOOR
6. JUNCTION BOX
7. 120V POWER SUPPLY BY OTHERS
8. MOUNT TO BUILDING WALL BEYOND OR APPROVED STRUCTURE (LOCATION MUST BE APPROVED BY OWNER'S REPRESENTATIVE PRIOR TO INSTALLATION)
9. GROUND WIRE PER MANUFACTURER & ASIC GUIDELINES
10. COMMUNICATIONS CABLES TO MASTER VALVE & FLOW SENSOR

NOTE:
1. INSTALL PER MANUFACTURE'S SPECS.
2. ALL CONDUIT ABOVE GROUND SHALL GALV. SCH. 40 PIPE.
3. GROUND CONTROLLER PER DETAILS AND MANUFACTURER'S SPECS.

E IRRIGATION CONTROLLER-WALL MOUNTED

SCALE: NTS — ELEVATION

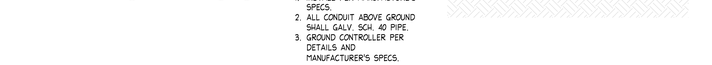

1. TOP FINISH GRADE/ TOP OF MULCH
2. DRIPLINE TUBING
3. DRIPLINE 180 2-WAY TEE
4. MULCH - SEE SHT. L-L101 DTL. B FOR DEPTHS.
5. BLANK DRIPLINE PIPE
6. USE COMPRESSION TEE OR ELL FOR POLY PIPE OR PVC TEE (SxSxT) FOR PVC PIPE
7. LATERAL PIPING- POLY PIPE OR PVC PIPE, SEE THE PLANS (SIZE AS PER PLAN)
8. FOR TRENCH DEPTHS (SEE TRENCHING AND SLEEVING DETAIL)
9. TOPSOIL - SEE SHT. L-L101 DTL. B FOR DEPTHS.
10. BURY DRIPPERLINE 2 TO 3 BELOW MULCH.
11. BARBED ADAPTER

B DRIPLINE START CONNECTION AND DEPTHS

SCALE: NTS — SECTION

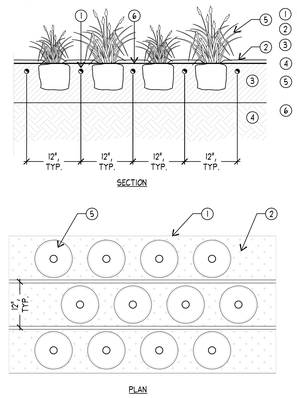

1. DRIPLINE TUBING
2. MULCH - SEE SPECS.
3. AMENDED TOPSOIL - SEE SPECS.
4. UNDISTURBED SUBGRADE
5. PLANT, SPACING VARIES - REFER TO PLANT SCHEDULE OR PLAN
6. WEED BARRIER FABRIC - SEE SPECS. USE ONLY UNDER ROCK MULCH-NOT BARK MULCH

NOTES:
1. CONTRACTOR TO RUN THE IRRIGATION SYSTEM AND VERIFY DRIPLINE DISTRIBUTION UNIFORMITY TO PLANT MATERIAL BEFORE BURYING THE DRIPLINE. IF NECESSARY, ADJUST DRIPLINE AND/OR PLANT MATERIAL.

C DRIPLINE SPACING

SCALE: NTS — SECTION/PLAN

E D A

[A] The Boston Building
9 Exchange Place, Suite 1100
Salt Lake City, Utah 84111

[O] 801 531 7600

[E] info@edaarch.com

[W] www.edaarch.com

PROJECT ARCHITECT RG
PROJECT MANAGER EP

LICENSED LANDSCAPE ARCHITECT
Richard L. Gilbert
No. 5734299
April 24, 2024
STATE OF UTAH

Arc Sitio Design, Inc
Landscape Architecture & Architectural Site Design
1058 East 2100 South Salt Lake City, Utah 84106
office 801 . 487 . 4923 www.arcsitiodesign.com

WASATCH COUNTY
COURTS EXPANSION

1361 US-40
HEBER CITY, UT 84032

PROJECT NUMBER XXXXXX

#	DESCRIPTION	DATE
1	PERMIT REVIEW SET	04.24.24

IRRIGATION DETAILS

L-R502

23 MAY 2024 © EDA

E:\EDAD_Wasatch Courts Expansion\Cad\L-RPR.dwg May 06, 2024 - 9:10am
Rhyd Geyer

E D A

[A] The Boston Building
9 Exchange Place, Suite 1100
Salt Lake City, Utah 84111

[O] 801 531 7600

[E] info@edaarch.com

[W] www.edaarch.com

PROJECT ARCHITECT	JB
PROJECT MANAGER	SH

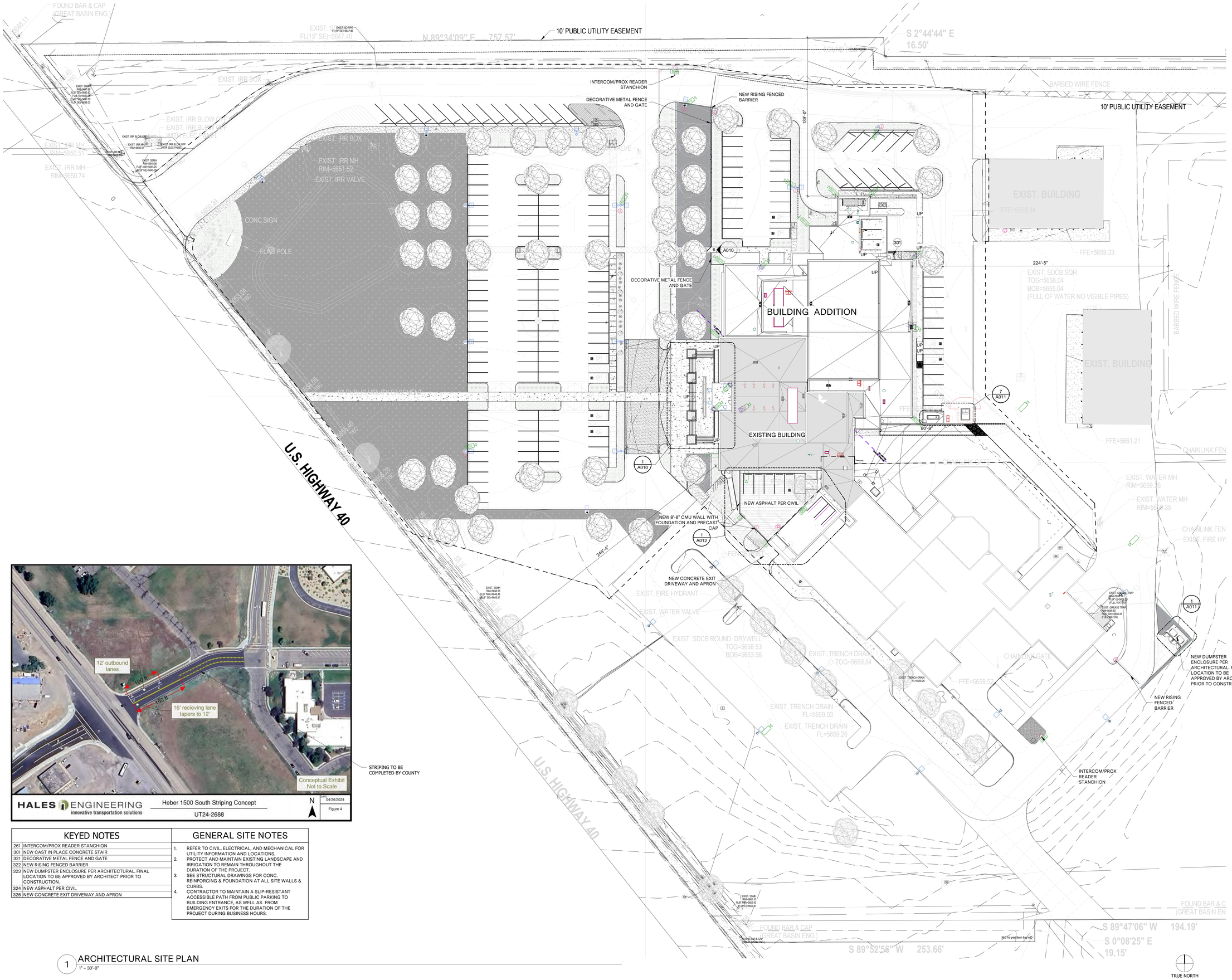

KEYED NOTES	
261	INTERCOM/PROX READER STANCHION
301	NEW CAST IN PLACE CONCRETE STAIR
321	DECORATIVE METAL FENCE AND GATE
322	NEW RISING FENCED BARRIER
323	NEW DUMPSTER ENCLOSURE PER ARCHITECTURAL. FINAL LOCATION TO BE APPROVED BY ARCHITECT PRIOR TO CONSTRUCTION.
324	NEW ASPHALT PER CIVIL
326	NEW CONCRETE EXIT DRIVEWAY AND APRON

GENERAL SITE NOTES

1. REFER TO CIVIL, ELECTRICAL, AND MECHANICAL FOR UTILITY INFORMATION AND LOCATIONS.
2. PROTECT AND MAINTAIN EXISTING LANDSCAPE AND IRRIGATION TO REMAIN THROUGHOUT THE DURATION OF THE PROJECT.
3. SEE STRUCTURAL DRAWINGS FOR CONC. REINFORCING & FOUNDATION AT ALL SITE WALLS & CURBS.
4. CONTRACTOR TO MAINTAIN A SLIP-RESISTANT ACCESSIBLE PATH FROM PUBLIC PARKING TO BUILDING ENTRANCE, AS WELL AS FROM EMERGENCY EXITS FOR THE DURATION OF THE PROJECT DURING BUSINESS HOURS.

1 ARCHITECTURAL SITE PLAN
1" = 30'-0"

WASATCH COUNTY COURTS EXPANSION

1361 US-40
HEBER CITY, UTAH 84032

PROJECT NUMBER	223053
# DESCRIPTION	DATE
DD SET	02.28.24
PERMIT REVIEW SET	04.24.24
FINAL BID PACKAGE	MM.DD.YY

ARCHITECTURAL SITE PLAN

A001

23 MAY 2024 © EDA

5/17/2024 1:10:38 PM

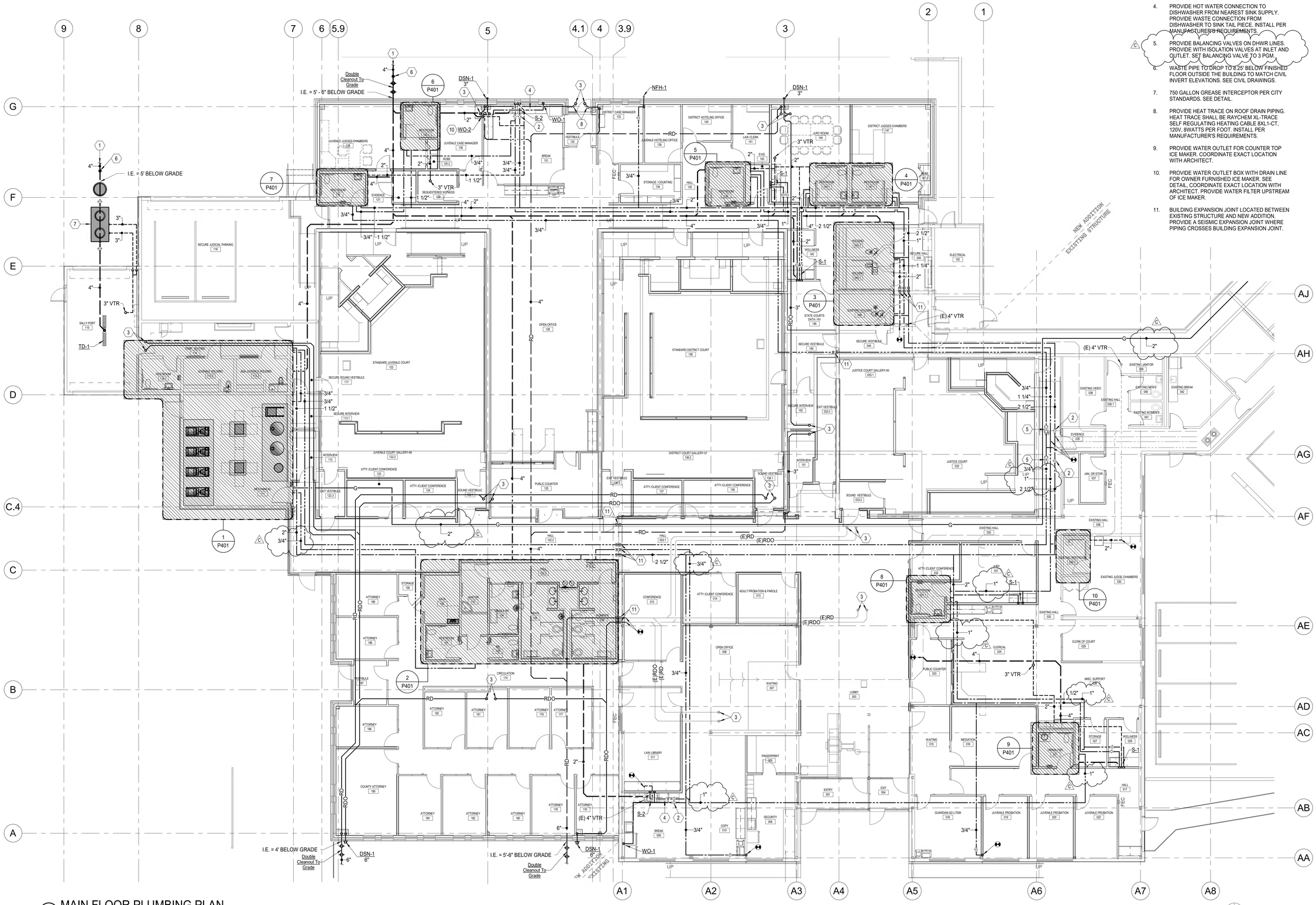

1 MAIN FLOOR PLUMBING PLAN
SCALE: 1/8" = 1'-0"

KEYED NOTES

1. SEE CIVIL DRAWINGS FOR CONTINUATION.
2. PROVIDE ISOLVATION VALVES IN ACCESSIBLE LOCATION. TYPICAL OF ALL.
3. RD/RDO PIPING TO ROOF DRAINS LOCATED ON LEVEL ABOVE.
4. PROVIDE HOT WATER CONNECTION TO DISHWASHER FROM NEAREST SINK SUPPLY. PROVIDE WASTE CONNECTION FROM DISHWASHER TO SINK TAIL PIECE. INSTALL PER MANUFACTURER'S REQUIREMENTS.
5. PROVIDE BALANCING VALVES ON DHWR LINES. PROVIDE WITH ISOLATION VALVES AT INLET AND OUTLET. SET BALANCING VALVE TO 3 PGM.
6. WASTE PIPE TO DROP TO 8.25' BELOW FINISHED FLOOR OUTSIDE THE BUILDING TO MATCH CIVIL INVERT ELEVATIONS. SEE CIVIL DRAWINGS.
7. 750 GALLON GREASE INTERCEPTOR PER CITY STANDARDS. SEE DETAIL.
8. PROVIDE HEAT TRACE ON ROOF DRAIN PIPING. HEAT TRACE SHALL BE RAYCHEM XL-TRACE SELF REGULATING HEATING CABLE 8XL1-CT, 120V, 8WATTS PER FOOT. INSTALL PER MANUFACTURER'S REQUIREMENTS.
9. PROVIDE WATER OUTLET FOR COUNTER TOP ICE MAKER. COORDINATE EXACT LOCATION WITH ARCHITECT.
10. PROVIDE WATER OUTLET BOX WITH DRAIN LINE FOR OWNER FURNISHED ICE MAKER. SEE DETAIL. COORDINATE EXACT LOCATION WITH ARCHITECT. PROVIDE WATER FILTER UPSTREAM OF ICE MAKER.
11. BUILDING EXPANSION JOINT LOCATED BETWEEN EXISTING STRUCTURE AND NEW ADDITION. PROVIDE A SEISMIC EXPANSION JOINT WHERE PIPING CROSSES BUILDING EXPANSION JOINT.

E D
A

[A] The Boston Building
9 Exchange Place, Suite 1100
Salt Lake City, Utah 84111

[O] 801 531 7600

[E] info@edaarch.com

[W] www.edaarch.com

PROJECT ARCHITECT JB
PROJECT MANAGER SH

ILLINOIS PROFESSIONAL ENGINEER
No. 8325442-2203
JACOB D. BECK
05-28-24
STATE OF UTAH

VBFA
181 East 5600 South
Murray, UT 84107
O: (801) 530-3148
F: (801) 530-3150
www.vbfa.com
vbfa project #: 23623

WASATCH COUNTY
COURTS EXPANSION

1361 US-40
HEBER CITY, UTAH 84032

PROJECT NUMBER 223053

#	DESCRIPTION	DATE
	DD SET	02.28.24
	PERMIT REVIEW SET	04.24.24
	100% CD / BID SET	05.28.24
B	ADDENDUM 01	06.05.24
C	ADDENDUM 02	06.12.24

PLUMBING PLAN

P101

24 APRIL 2024 © EDA

6/12/2024 11:30:10 AM

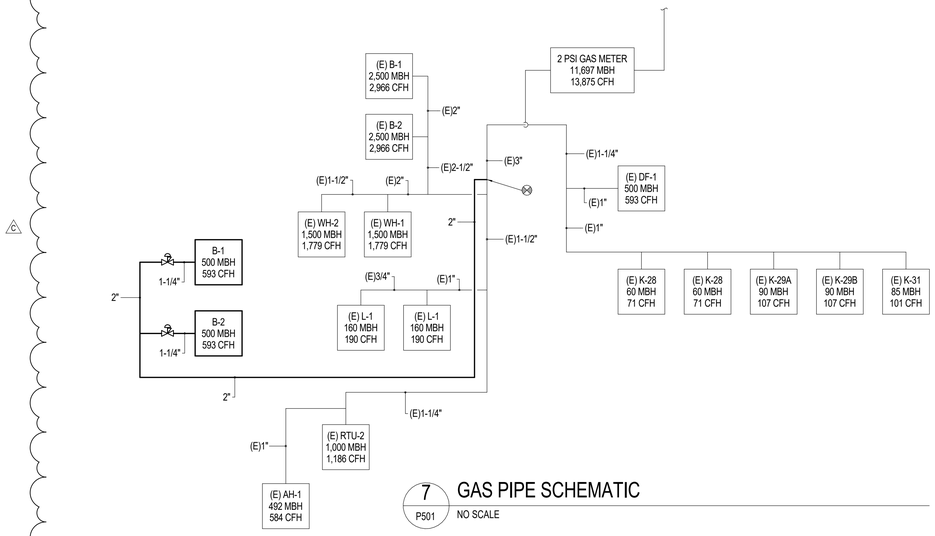

7 P501 GAS PIPE SCHEMATIC

NO SCALE

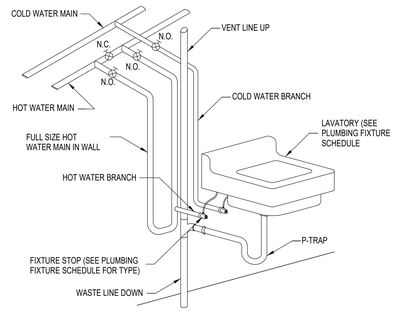

4 P501 LAVATORY PIPING DETAIL

NO SCALE

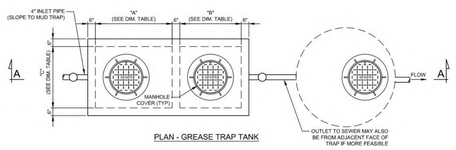

PLAN - GREASE TRAP TANK

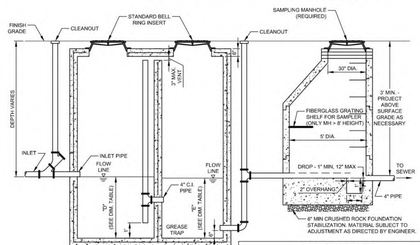

SECTION A-A
GREASE TRAP TANK

DIMENSION TABLE					
GREASE TRAP SIZE IN GALLONS	A	B	C	D	E
1500	5'-8"	4'-8"	5'-0"	4'-4"	4'-0"
1000	5'-0"	4'-0"	4'-0"	4'-0"	3'-11"
750	3'-1"	3'-1"	4'-0"	4'-2"	3'-10"

NOTES:
1. CONCRETE SHALL HAVE A MINIMUM 28 DAY COMPRESSIVE STRENGTH OF 4000 PSI.
2. REINFORCING STEEL SHALL BE ASTW A615 GRADE 60.
3. THE CONCRETE COVER OVER THE REINFORCING STEEL SHALL BE A MINIMUM OF 1½ INCHES.
4. THE STRUCTURE SHALL BE DESIGNED AND STAMPED BY A REGISTERED PROFESSIONAL ENGINEER LICENSED IN THE STATE OF UTAH.
5. THE STRUCTURE SHALL BE DESIGNED FOR THE FOLLOWING LOADING CRITERIA:
   A. WALLS DESIGNED FOR A SATURATED EQUIVALENT FLUID AT-REST SOIL PRESSURE OF 120 PCF PLUS TRUCK SURCHARGE.
   B. TRUCK LOADING USING AN AASHTO H-20 TRUCK LOAD
6. THE MANWAY FRAME AND COVER SHALL BE A TRAFFIC TYPE CASTING FOR H-20 TRUCK LOAD.
7. THE TOP OF THE GREASE TRAP TANK SHALL BE FLUSH WITH THE FINISHED GRADE AND OUT OF THE TANK SHALL BE 4'-0" ABOVE THE TANK FLOOR.
8. PLUMBING OUTSIDE OF THE GREASE INTERCEPTOR WILL BE IN ACCORDANCE TO LOCAL REGULATIONS.
9. THE BAFFLE INSIDE THE INTERCEPTOR SHALL BE WITHIN 3 INCHES OF THE CEILING.
10. COVERS SHALL BE CIRCULAR AND SHALL BE SOLID WITH PICK HOLES FOR REMOVAL.
11. THE INLET PIPE SHALL BE AT AN ELEVATION OF 1 INCH OR HIGHER THAN THE OUTLET PIPE.
12. SANITARY WASTES FROM TOILETS SHALL NOT BE PLUMBED TO GREASE INTERCEPTORS.
13. PIPING AS PER CITY OR SANITARY DISTRICT REQUIREMENTS.
14. PROVIDE A SEPARATE VENT LINE AS REQUIRED BY THE INTERNATIONAL PLUMBING CODE.

6 P501 GREASE INTERCEPTOR DETAIL (750 GALLON)

NO SCALE

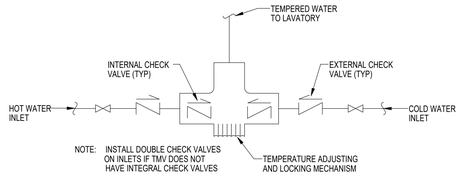

3 P501 THERMOSTATIC MIXING VALVE DETAIL

NO SCALE

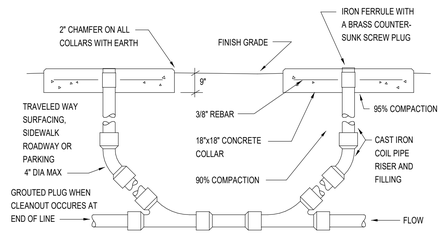

2 P501 CLEANOUT TO GRADE DETAIL (COTG)

NO SCALE

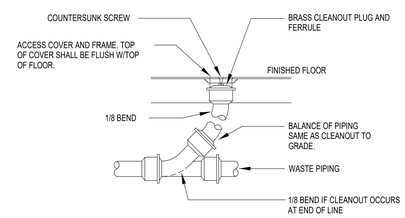

1 P501 FLOOR CLEANOUT DETAIL

NO SCALE

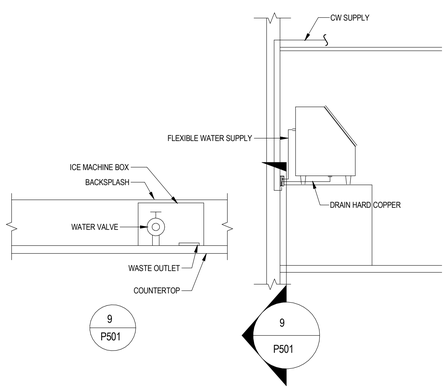

8 P501 ICE MAKER WATER OUTLET BOX

NO SCALE

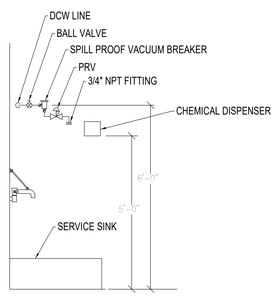

5 P501 CHEMICAL DISPENSER DETAIL

NO SCALE

E D A

[A] The Boston Building
9 Exchange Place, Suite 1100
Salt Lake City, Utah 84111

[O] 801 531 7600

[E] info@edaarch.com

[W] www.edaarch.com

PROJECT ARCHITECT JB
PROJECT MANAGER SH

VBFA
181 East 5600 South
Murray, UT 84107
O: (801) 530-3148
F: (801) 530-3150
www.vbfa.com
vbfa project #: 23623

WASATCH COUNTY
COURTS EXPANSION

1361 US-40
HEBER CITY, UTAH 84032

PROJECT NUMBER 223053

#	DESCRIPTION	DATE
	DD SET	02.28.24
	PERMIT REVIEW SET	04.24.24
	100% CD / BID SET	05.28.24
B	ADDENDUM 01	06.05.24
C	ADDENDUM 02	06.12.24

PLUMBING DETAILS

P501

24 APRIL 2024

© EDA

6/12/2024 11:30:22 AM

SITE LIGHT FIXTURE SCHEDULE

LIGHT FIXTURE ABBREVIATION SCHEDULE		PROJECT MANAGER: FRANK KNAUS
A.F.F. ABOVE FINISH FLOOR WALL@CLG WALL MOUNT AT CORNER OF WALL AND CEILING CCBA CUSTOM PAINTED COLOR AS SELECTED BY THE ARCHITECT	SCBA STANDARD PAINTED COLOR AS SELECTED BY THE ARCHITECT CFBA CUSTOM FINISH AS SELECTED BY THE ARCHITECT SFBA STANDARD FINISH AS SELECTED BY THE ARCHITECT	

LIGHT FIXTURE GENERAL NOTES

1. REFER TO ARCHITECTURAL REFLECTED CEILING PLANS FOR LOCATIONS OF LIGHT FIXTURES AND, CONFIRM CEILING TYPES WITH LIGHT FIXTURE TRIMS. BRING ALL DISCREPANCIES OF LOCATIONS AND QUANTITIES TO THE ATTENTION OF THE ARCHITECT AND ELECTRICAL ENGINEER PRIOR TO BIDDING.
2. REFER TO ARCHITECTURAL ELEVATIONS FOR MOUNTING HEIGHTS AND LOCATIONS OF LIGHT FIXTURES. BRING ALL DISCREPENCIES TO THE ATTENTION OF THE ARCHITECT PRIOR TO BIDDING.
3. REFER TO THE SPECIFICATIONS FOR OTHER LIGHT FIXTURE, FUSING, LED DRIVERS, AND LAMP REQUIREMENTS AND ACCEPTABLE MANUFACTURERS.
4. CONFIRM AVAILABLE MOUNTING DEPTHS OF ALL LIGHT FIXTURES AND COMPARE WITH DEPTHS SHOWN ON SHOP DRAWINGS. BRING ALL POTENTIAL CONFLICT AREAS TO THE ATTENTION OF THE ARCHITECT AND ELECTRICAL ENGINEER PRIOR TO RELEASE.
5. REFER TO LIGHTING PLANS FOR ALL LINEAR FIXTURE LENGTHS. THE CATALOG NUMBER IS BASED ON THE FIXTURE SPECIFIED AND MAY NOT REFLECT THE QUANTITY OR OVERALL LENGTH OF LINEAR FIXTURES REQUIRED. CONTRACTOR TO NOTE THAT VARIOUS FIXTURE LENGTHS MAY BE REQUIRED TO ACHIEVE THE OVERALL RUN LENGTH.
6. REFER TO LIGHTING PLANS FOR ALL UNDERCABINET FIXTURE LENGTHS. THE CATALOG NUMBER IS BASED ON THE FIXTURE SPECIFIED AND MAY NOT REFLECT THE QUANTITY OR OVERALL LENGTH OF THE UNDERCABINET FIXTURES REQUIRED. CONTRACTOR TO NOTE THAT VARIOUS FIXTURE LENGTHS MAY BE REQUIRED TO ACHIEVE THE OVERALL RUN LENGTH OR TO FIT WITHIN THE MILLWORK. COORDINATE FIXTURE LAYOUT WITH MILLWORK SHOP DRAWINGS PRIOR TO LIGHTING SUBMITTALS.
7. WHEN A CONTRADICTION EXISTS BETWEEN A SPECIFIC MODEL NUMBER AND THE DESCRIPTION, NOTIFY THE ELECTRICAL ENGINEER AND/OR LIGHTING DESIGNER.
8. PRIOR APPROVALS ARE REQUIRED BEFORE BIDDING THE PROJECT AND SHALL BE SUBMITTED TO THE ELECTRICAL ENGINEER'S OFFICE AT LEAST (8) EIGHT WORKING DAYS BEFORE THE BID. PRIOR APPROVALS RECEIVED AFTER THIS TIME PERIOD SHALL BE...
9. REFER TO SPECIFICATIONS 20 0500, 26 5100 & 26 5600 (16001, 16510 & 16551).
10. VALUE ENGINEERING CONDUCTED WITHOUT THE DESIGN TEAM IE; ARCHITECT, ENGINEER & LIGHTING CONSULTANT/DESIGNER WILL NOT BE ALLOWED, REVIEWED OR APPROVED.

TYPE	DESCRIPTION	MFR.	CATALOG #	VOLTS	TOTAL WATTS	LAMP TYPE	DELIVERED LUMENS	COLOR TEMP	CRI
OP2	14'-0" TALL 5" DIAMETER ROUND FLUTED POLE. FIXTURE TO BE EQUIPPED WITH MOTION SENSOR AND WILL DIM LIGHT OUTPUT WHEN NO MOTION IS DETECTED. FIXTURE SHALL NOT BE MOUNTED MORE THEN 16'0" AFF MEASURED TO FIXTURE LENS. FIXTURE AND POLE TO HAVE BLACK FINISH.	LITHONIA	LITHONIA DSX HEAD WITH STERNBERG FLUTED POLE	208 V	102 VA	LED	13,055	3000 K	70
OP11	14'-0" TALL 5" DIAMETER ROUND FLUTED POLE. FIXTURE TO BE EQUIPPED WITH MOTION SENSOR AND WILL DIM LIGHT OUTPUT WHEN NO MOTION IS DETECTED. FIXTURE SHALL NOT BE MOUNTED MORE THEN 16'0" AFF MEASURED TO FIXTURE LENS. FIXTURE AND POLE TO HAVE BLACK FINISH.	LITHONIA	LITHONIA DSX HEAD WITH STERNBERG FLUTED POLE	208 V	102 VA	LED	13,403	3000 K	70
OP12	14'-0" TALL 5" DIAMETER ROUND FLUTED POLE. FIXTURE TO BE EQUIPPED WITH MOTION SENSOR AND WILL DIM LIGHT OUTPUT WHEN NO MOTION IS DETECTED. FIXTURE SHALL NOT BE MOUNTED MORE THEN 16'0" AFF MEASURED TO FIXTURE LENS. FIXTURE AND POLE TO HAVE BLACK FINISH.	LITHONIA	LITHONIA DSX HEAD WITH STERNBERG FLUTED POLE	208 V	204 VA	LED	26,406	3000 K	70
OW1	WALL MOUNTED LED AREA LIGHTS. FIXTURE TO DIE CAST ALUMINUM HOUSING.	LITHONIA	DSXW1 LED	120 V	50 VA	LED	2,000	3000 K	70

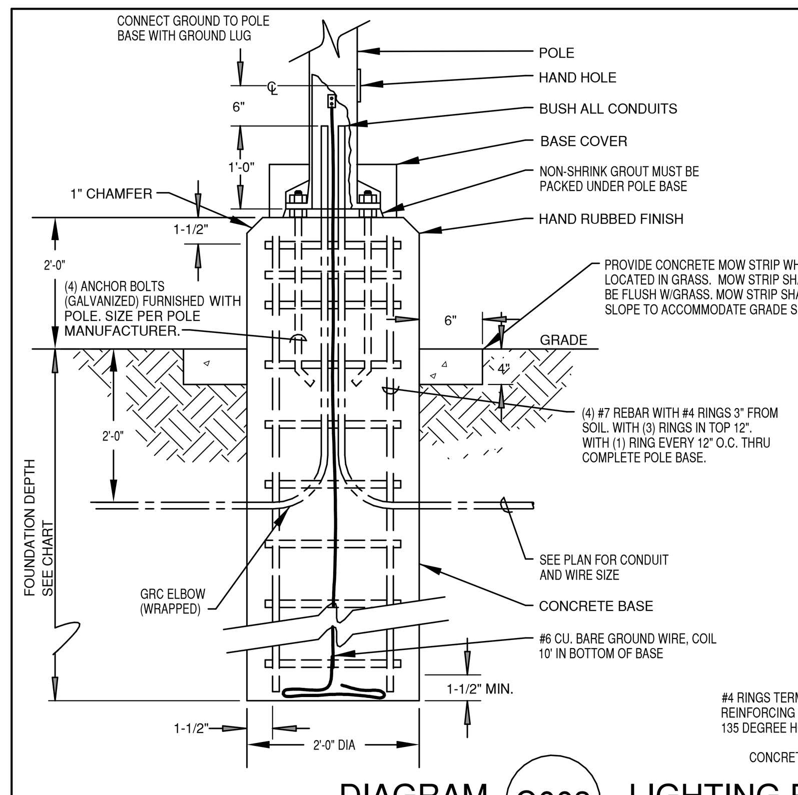

POLE FOUNDATION DEPTH

POLE HEIGHT	2'-0" ABOVE GRADE
10'	4'
15'	4'-6"
20'	5'
25'	5'-6"
30'	6'
35'	6'-6"
40'	7'

* ALL FOUNDATIONS ARE 24" IN DIAMETER UNLESS NOTED OTHERWISE.

PROVIDE BUSSMAN HEB FUSEHOLDER (OR LITTELFUSE LEB-XX-S) WITH "BREAKAWAY" RECEPTACLES IN ALL CONDUCTORS RUNNING TO THE TOP OF EACH POLE. LOCATE FUSEHOLDER AT HAND HOLE OR IN BASE JUNCTION BOX AS APPLICABLE.

DIAGRAM C003 LIGHTING POLE FOUNDATION
NTS

SYMBOL LEGEND

NOTES:

1. SEE FIXTURE SCHEDULE FOR TYPE, MOUNTING AND WATTAGE.
2. HEIGHT MEASURED TO CENTER LINE OF THE BOX FROM THE FINISHED FLOOR.
3. REFER TO DRAWINGS FOR DIRECTIONAL ARROWS.
4. SUBSCRIPT INDICATES FIXTURES TO BE CONTROLLED.
5. NEMA TYPE 'ND' NON-FUSED UNLESS NOTED 'F' (FUSED). USE 'HD' 480 V.
6. HEIGHT MEASURED TO TOP OF THE BOX FROM FINISHED FLOOR.
7. PROVIDE H.O.A. AND S.S. PUSHBUTTONS AS REQUIRED.
8. DOUBLE ARROWS INDICATES A DOUBLE FACE UNIT.
9. DEVICES NOTED WITH AN 'A' INDICATE TO COORDINATE WITH MILLWORK SHOP DRAWINGS AND ELEVATIONS FOR HEIGHT.
10. SUBSCRIPT INDICATES NEMA CONFIGURATION.
11. SOLID BOX AROUND DEVICE INDICATES INSTALLED IN FLOOR. DASHED BOX AROUND DEVICE INDICATES INSTALLED IN CEILING.
12. COORDINATE WITH DOOR HARDWARE SUPPLIER.
13. FOR WATER COOLER LOCATION, SEE DIAGRAM R002. FOR ALL OTHER LOCATIONS, MOUNT AT +16" TO BOTTOM OF BOX FROM FINISHED FLOOR, OR AS NOTED.
14. ARROWS SHOWN ON DEVICE INDICATE AIMING DIRECTION.
15. CAMERA NUMBERS ARE SHOWN INSIDE THE CAMERA SYMBOL. CAMERA TYPES ARE INDICATED IN TAG.
16. MOUNT ON TRACK OF OVERHEAD DOOR, 6" FROM TOP OF DOOR, UNLESS OVERHEAD DOOR IS A ROLL UP DOOR, THEN MOUNT PER MANUFACTURER'S INSTRUCTIONS.
17. INSTALL DEVICES PER MANUFACTURER'S INSTALLATION INSTRUCTIONS.
18. DASHED LINE INDICATES EQUIPMENT CLEARANCES. ARROW INDICATES FRONT OF RACK.
19. SPEAKER TO BE MOUNTED IN HORIZONTAL POSITION.
20. MOUNTING HEIGHT IS TO BOTTOM OF DISPLAY.

*TYPICAL SYMBOL SCHEDULE. SOME SYMBOLS MAY NOT BE USED ON THIS SET OF DRAWINGS.

STANDARD MOUNTING HEIGHT UNLESS OTHERWISE NOTED ON PLANS

GENERAL

SYMBOL	DESCRIPTION	MOUNTING HEIGHT	NOTES
	ONE CIRCUIT, HOME RUN TO PANEL		
	2 CIRCUIT, HOME RUN TO PANEL		
	3 CIRCUIT, HOME RUN TO PANEL		
	CONDUIT RUN CONCEALED IN WALL OR CEILING		
	CONDUIT RUN CONCEALED IN FLOOR OR GROUND		
	CONDUIT UP		
	CONDUIT DOWN		
	CONDUIT STUB LOCATION	CAP CONDUIT	
	CONDUIT / CIRCUIT CONTINUATION		

SYMBOL	DESCRIPTION	MOUNTING HEIGHT	NOTES
	EQUIPMENT PANEL, SEE DRAWINGS	+72"	6.
	CABLE TRAY	AS NOTED	
	GROUND BUS BAR	+18"	6.
X	LIGHT FIXTURE (LETTER DESIGNATES TYPE)		
X X	EQUIPMENT NUMBER		
X	ARCHITECTURAL ROOM NUMBER		
X	DEVICE / EQUIPMENT (TEXT DESIGNATES TYPE) SEE SCHEDULE		
X	DEVICE / EQUIPMENT (TEXT DESIGNATES TYPE) SEE SCHEDULE / LEGEND		

LIGHTING

SYMBOL	DESCRIPTION	MOUNTING HEIGHT	NOTES
	CEILING LIGHT FIXTURE	CEILING	1.
	WALL LIGHT FIXTURE	AS NOTED	1.
	RECESSED DOWNLIGHT FIXTURE	CEILING	1.
	RECESSED WALL-WASH DOWNLIGHT FIXTURE	CEILING	1.
	LIGHT FIXTURE	AS NOTED	1.
	EGRESS LIGHT FIXTURE	AS NOTED	1.
	AREA LIGHT POLE AND FIXTURE POST TOP LIGHT POLE AND FIXTURE	CONCRETE BASE	1. 14. SEE DIAGRAM
	BOLLARD	CONCRETE BASE	1. 14. SEE DIAGRAM
	STEP LIGHT FIXTURE	AS NOTED	1.
	IN-GRADE LIGHT FIXTURE	CONCRETE BASE	1.
	FLOOD OR TRACK FIXTURE	AS NOTED	1.
	CEILING / WALL MOUNTED EXIT LIGHT	CEILING/ AS NOTED	1. 3. 8.
	EMERGENCY LIGHT FIXTURE	AS NOTED	1.
	COMBO EXIT / EMERGENCY LIGHT FIXTURE	AS NOTED	1.
TC	TIME CLOCK	+60"	2.

SYMBOL	DESCRIPTION	MOUNTING HEIGHT	NOTES
PP	POWER PACK	ABOVE CEILING	SEE DIAGRAM, SPEC.
RC X	DIGITAL ROOM CONTROLLER (SUBSCRIPT INDICATES NUMBER OF RELAYS)	ABOVE CEILING	SEE DIAGRAM, SPEC.
EP	EMERGENCY LIGHTING CONTROL UNIT	ABOVE CEILING	SEE DIAGRAM, SPEC.
$^3	THREE-WAY SWITCH	+46"	2. 4.
$^4	FOUR-WAY SWITCH	+46"	2. 4.
$^K	KEY OPERATED SWITCH	+46"	2. 4.
$^P	SWITCH WITH PILOT LIGHT	+46"	2. 4.
$^D	VARIABLE INTENSITY SWITCH	+46"	2. 4.
$^TM	TIMER SWITCH	+46"	2. 4.
	MOMENTARY CONTACT SWITCH	+46"	2. 4.
X	LOW VOLTAGE WALLSTATION (SUBSCRIPT INDICATES CONFIGURATION & CONTROL SEQUENCE)	+46"	2. SEE DIAGRAM, SPEC.
	DUAL TECH. CEILING MOUNTED OCCUPANCY SENSOR (PROVIDE WITH ALL PP AND ROOM CONTROLLERS)	CEILING	SEE DIAGRAM, SPEC.
	DUAL TECH. WALL MOUNTED OCCUPANCY SENSOR (SUBSCIPT D = DIMMING AND DAYLIGHT CONTROL)	+46"	2. 4. SEE DIAGRAM, SPEC.
P	PHOTO-ELECTRIC CONTROL (LOCATE ON ROOF, FACE NORTH)	AS NOTED	MOUNT AS PER MFR.
	DIGITAL DAYLIGHT SENSOR	CEILING	SEE DIAGRAM, SPEC.

SITE LIGHTING SHEET INDEX

ES1	SCHEDULES AND DIAGRAMS
ES2	PHOTOMETRIC SITE PLAN

D-Series Size 1
LED Area Luminaire

Catalog Number
Notes
Type: OP2, OP11 & OP12

Introduction

The modern styling of the D-Series features a highly refined aesthetic that blends seamlessly with its environment. The D-Series offers the benefits of the latest in LED technology into a high performance, high efficacy, long-life luminaire.

The photometric performance results in sites with excellent uniformity, greater pole spacing and lower power density. D-Series outstanding photometry aids in reducing the number of poles required in area lighting applications with typical energy savings of 65% and expected service life of over 100,000 hours.

Specifications

EPA:	0.69 ft² (0.06 m²)
Length:	32.71" (83.1 cm)
Width:	14.26" (36.2 cm)
Height H1:	7.88" (20.0 cm)
Height H2:	2.73" (6.9 cm)
Weight:	34 lbs (15.4 kg)

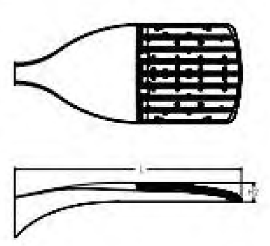

Ordering Information

EXAMPLE: DSX1 LED P7 40K 70CRI T3M MVOLT SPA NLTAIR2 PIRHN DDBXD

Series	LEDs	Color temperature	Color Rendering Index	Distribution		Voltage	Mounting
DSX1 LED	Forward optics: P1 P6, P2 P7, P3 P8, P4 P9, P5; Rotated optics: P10 P12, P11 P13	(this section 70CRI only) 30K 3000K, 40K 4000K, 50K 5000K; (this section 80CRI only, extended lead times apply) 27K 2700K, 30K 3000K, 35K 3500K, 40K 4000K, 50K 5000K	70CRI, 70CRI, 70CRI; 80CRI, 80CRI, 80CRI, 80CRI, 80CRI	AFR Automotive front row; T1S Type I short; T2M Type II medium; T3M Type III medium; T3LG Type III low glare; T4M Type IV medium; T4LG Type IV low glare; TFTM Forward throw medium	T5M Type V medium; T5LG Type V low glare; T5W Type V wide; BLC3 Type III backlight control; BLC4 Type IV backlight control; LCCO Left corner cutoff; RCCO Right corner cutoff	MVOLT (120V-277V); HVOLT (347V-480V); XVOLT (277V - 480V); 120; 208; 240; 277; 347; 480	Shipped included: SPA Square pole mounting (#8 drilling); RPA Round pole mounting (#8 drilling); SPA5 Square pole mounting #5 drilling; RPA5 Round pole mounting #5 drilling; SPA8N Square narrow pole mounting #8 drilling; WBA Wall bracket; MA Mast arm adapter (mounts on 2 3/8" OD horizontal tenon)

Control options		Other options	Finish (required)
Shipped installed: NLTAIR2 PIRHN nLight AIR gen 2 enabled with bi-level motion / ambient sensor, 8-40' mounting height, ambient sensor enabled at 2fc; PIR High/low, motion/ambient sensor, 8-40' mounting height, ambient sensor enabled at 2fc; PER NEMA twist-lock receptacle only (controls ordered separate); PER5 Five-pin receptacle only (controls ordered separate)	PER7 Seven-pin receptacle only (controls ordered separate); FAO Field adjustable output; BL30 Bi-level switched dimming, 30%; BL50 Bi-level switched dimming, 50%; DMG 0-10v dimming wires pulled outside fixture (for use with an external control, ordered separately); DS Dual switching	Shipped installed: SPD20KV 20KV surge protection; HS Houseside shield (black finish standard); L90 Left rotated optics; R90 Right rotated optics; CCE Coastal Construction; HA 50°C ambient operation; BAA Buy America(n) Act Compliant; SF Single fuse (120, 277, 347V); DF Double fuse (208, 240, 480V); Shipped separately: EGSR External Glare Shield (reversible, field install required, matches housing finish); BSDB Bird Spikes (field install required)	DDBXD Dark Bronze; DBLXD Black; DNAXD Natural Aluminum; DWHXD White; DDBTXD Textured dark bronze; DBLBXD Textured black; DNATXD Textured natural aluminum; DWHGXD Textured white

© 2011-2023 Acuity Brands Lighting, Inc. All rights reserved.

Specification Sheet

Round Poles
450, 550, LU900 & SL900

Project Name: WASATCH COUNTY COURTHOUSE EXPANSION TYPES OP2, OP11 & OP12
Qty
Type
Catalog / Part Number

Shafts

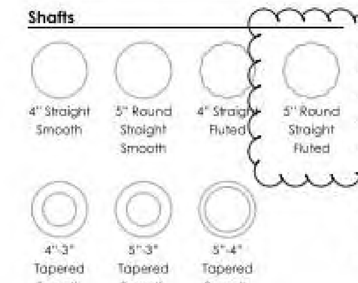

5 Year Warranty

Certifications

Description

These round poles are offered with with low profile base covers. The base is made of heavy wall, 356 alloy cast aluminum. It will have a 3/4" thick floor cast as an integral part of the base. It will have a cast anchor bolt cover designed with a curved relief. The shaft shall be double circumferentially welded internally and externally to the base for added strength.

Physical

Pole Model	450: 10.5" Ø x 3" Tall LU900: 19" Ø x 9" Tall	550: 12" Ø x 4" Tall SL900: 18.5" Ø x 6" Tall
Shafts	T4: 4"-3" Tapered Smooth FP4: 4" Straight Fluted T54: 5"-4" Tapered Smooth FP5: 5" Round Straight Fluted	P4: 4" Straight Smooth T5: 5"-3" Tapered Smooth P5: 5" Round Straight Smooth
Height (in feet)	8', 10', 12', 14', 16', 18', 20', 22', 24', 26', 28'	
Wall Thickness	.125: 1/8" Wall Thickness .188: 3/16" Wall Thickness .250: 1/4" Wall Thickness	
Optional Post Center Cap	BCC: Ball Center Cap SCC: Spike Center Cap SSCC: Side Spike Center Cap	FCC: Finial Center Cap TFCC: Tall Finial Center Cap RCC: Round Center Cap PCC: Plate Center Cap, Flat
Optional Burial	DB4: Direct Burial mounting style pole, with 4' direct burial section (or advise other length) HXB: HXB - Helix Base mounting style pole	
Optional Vibration Damper	VD: Internal Vibration Damper	

Sternberg reserves the right to make changes to this product at any time without prior notice and such modification shall be effective immediately.
2024.03.12 Copyright © 2024 Sternberg

D-Series Size 1
LED Wall Luminaire

Catalog Number
Notes
Type: OW1

Specifications

Luminaire

Width:	13-3/4" (34.9 cm)	Weight:	12 lbs (5.4 kg)
Depth:	10" (25.4 cm)		
Height:	6-3/8" (16.2 cm)		

Back Box (BBW, E20WC)

Width:	13-3/4" (34.9 cm)	BBW Weight:	5 lbs (2.3 kg)
Depth:	4" (10.2 cm)	E20WC Weight:	10 lbs (4.5 kg)
Height:	6-3/8" (16.2 cm)		

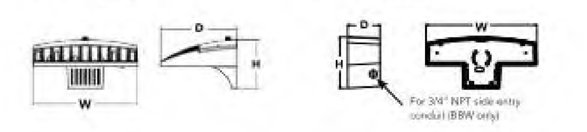

Introduction

The D-Series Wall luminaire is a stylish, fully integrated LED solution for building-mount applications. It features a sleek, modern design and is carefully engineered to provide long-lasting, energy-efficient lighting with a variety of optical and control options for customized performance.

With an expected service life of over 20 years of nighttime use and up to 74% in energy savings over comparable 250W metal halide luminaires, the D-Series Wall is a reliable, low-maintenance lighting solution that produces sites that are exceptionally illuminated.

Ordering Information

EXAMPLE: DSXW1 LED 20C 1000 40K T3M MVOLT DDBTXD

Series	LEDs	Drive Current	Color temperature	Distribution	Voltage	Mounting	Control Options
DSXW1 LED	10C 10 LEDs (one engine); 20C 20 LEDs (two engines)	350 350 mA; 530 530 mA; 700 700 mA; 1000 1000 mA (1 A)	30K 3000K; 40K 4000K; 50K 5000K; AMBPC Amber phosphor converted	T2S Type II Short; T2M Type II Medium; T3S Type III Short; T3M Type III Medium; T4M Type IV Medium; TFTM Forward Throw Medium	MVOLT; 120; 208; 240; 277; 347; 480	Shipped included: (blank) Surface mounting bracket; BBW Surface-mounted back box (for conduit entry)	Shipped installed: PE Photoelectric cell, button type; DMG 0-10v dimming wires pulled outside fixture (for use with an external control, ordered separately); PIR 180° motion/ambient light sensor, <15' mtg ht; PIRH 180° motion/ambient light sensor, 15-30' mtg ht; PIR1FC3V Motion/ambient sensor, 8-15' mounting height, ambient sensor enabled at 1fc; PIRH1FC3V Motion/ambient sensor, 15-30' mounting height, ambient sensor enabled at 1fc; E20WC Emergency battery backup (includes external component enclosure), CA Title 20 compliant

Other Options		Finish (required)
Shipped installed: SF Single fuse (120, 277 or 347V); DF Double fuse (208, 240 or 480V); HS House-side shield; SPD Separate surge protection	Shipped separately: BSW Bird-deterrent spikes; VG Vandal guard; DDL Diffused drop lens	DDBXD Dark bronze; DBLXD Black; DNAXD Natural aluminum; DWHXD White; DSSXD Sandstone; DDBTXD Textured dark bronze; DBLBXD Textured black; DNATXD Textured natural aluminum; DWHGXD Textured white; DSSTXD Textured sandstone

Accessories
Ordered and shipped separately.

DSXWHS U	House-side shield (one per light engine)
DSXWBSW U	Bird-deterrent spikes
DSXWVG U	Vandal guard accessory

NOTES
1. 20C 1000 is not available with PIR, PIRH, PIR1FC3V or PIRH1FC3V.
2. MVOLT driver operates on any line voltage from 120-277V (50/60 Hz).
3. Single fuse (SF) requires 120, 277 or 347 voltage option. Double fuse (DF) requires 208, 240 or 480 voltage option.
4. Only available with 20C, 700mA or 1000mA. Not available with PIR or PIRH.
5. Back box ships installed on fixture. Cannot be field installed. Cannot be ordered as an accessory.
6. Photocontrol (PE) requires 120, 208, 240, 277 or 347 voltage option. Not available with motion/ambient light sensors (PIR or PIRH).
7. Reference Motion Sensor table on page 3.
8. Same as old ELCW. Cold weather (-20C) rated. Not compatible with conduit entry applications. Not available with BBW mounting option. Not available with fusing. Not available with 347 or 480 voltage options. Emergency components located in back box housing. Emergency mode IES files located on product page at
9. Not available with SPD.
10. Not available with E20WC.
11. Also available as a separate accessory; see Accessories information.
12. Not available with E20WC.

© 2013-2023 Acuity Brands Lighting, Inc. All rights reserved.

E D A

[A] The Boston Building
9 Exchange Place, Suite 1100
Salt Lake City, Utah 84111
[O] 801 531 7600
[E] info@edaarch.com
[W] www.edaarch.com

PROJECT ARCHITECT JB
PROJECT MANAGER SH

NOT FOR CONSTRUCTION

BNA CONSULTING
4225 Lake Park Blvd Ste 275
West Valley City, Utah 84120
P:801.532.2196
www.bnaconsulting.com
SALT LAKE ST. GEORGE

WASATCH COUNTY COURTS EXPANSION

1361 US-40
HEBER CITY, UTAH 84032

PROJECT NUMBER 223053

#	DESCRIPTION	DATE
	Permit Review Set	04.24.24

SCHEDULES AND DIAGRAMS

ES1

23 MAY 2024

© EDA

5/13/2024 1:43:02 PM

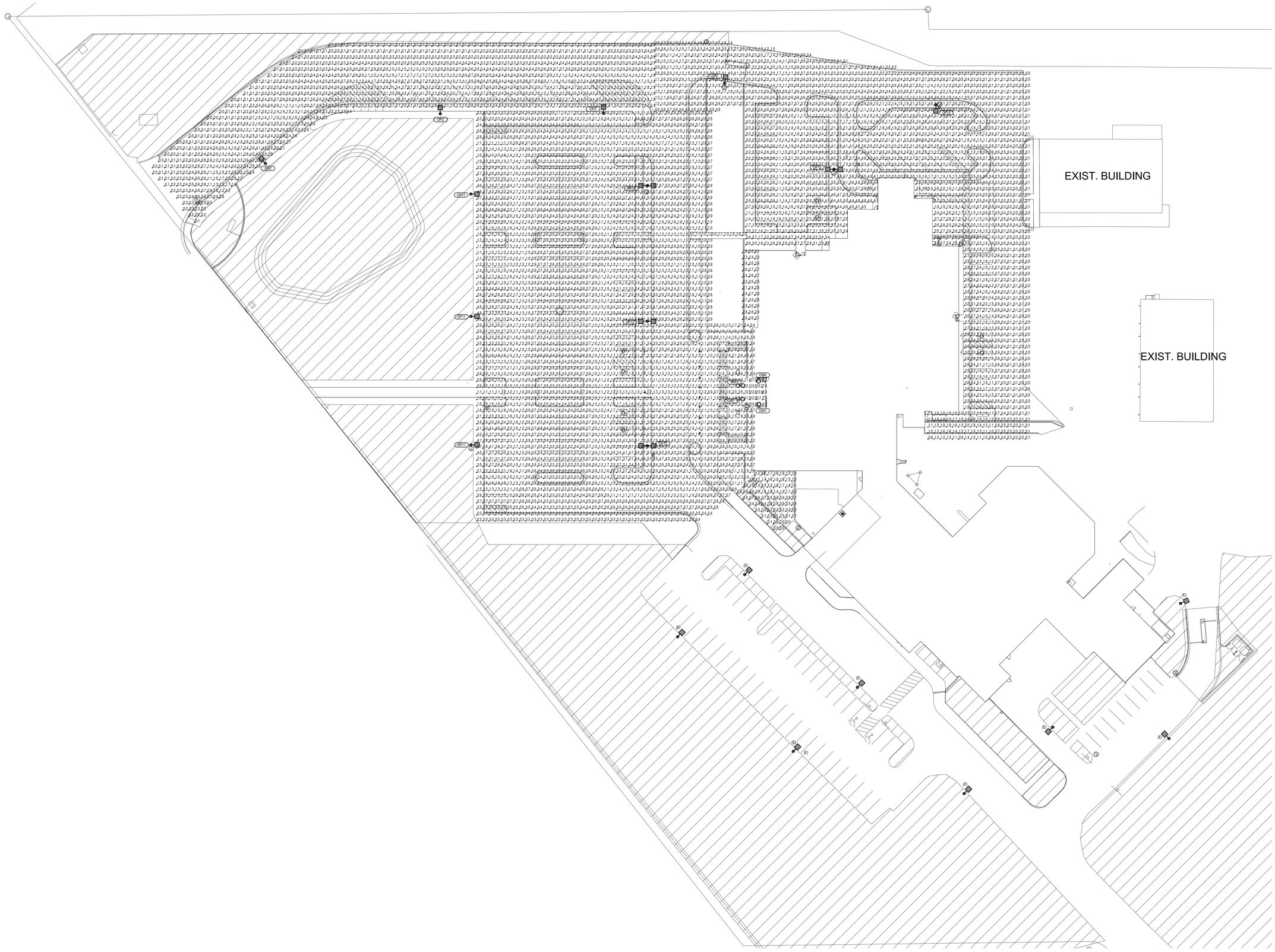

PHOTOMETRIC SITE PLAN
SCALE = 1" = 30'-0"

E D
A

[A] The Boston Building
9 Exchange Place, Suite 1100
Salt Lake City, Utah 84111

[O] 801 531 7600

[E] info@edaarch.com

[W] www.edaarch.com

PROJECT ARCHITECT	JB
PROJECT MANAGER	SH

NOT FOR CONSTRUCTION

BNA CONSULTING
4225 Lake Park Blvd Ste 275
West Valley City, Utah 84120
P.801.532.2196
www.bnaconsulting.com
SALT LAKE STORAGE

WASATCH COUNTY COURTS EXPANSION

1361 US-40
HEBER CITY, UTAH 84032

PROJECT NUMBER	223053

#	DESCRIPTION	DATE
	Permit Review Set	04.24.24

PHOTOMETRIC SITE PLAN

ES2

23 MAY 2024

© EDA

5/13/2024 1:43:03 PM

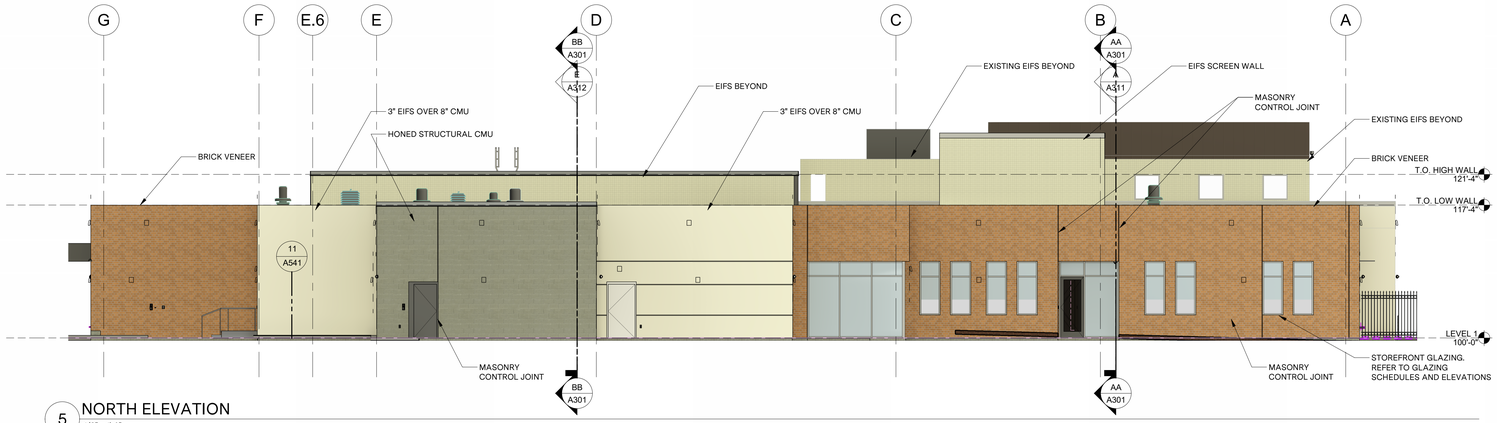

5 NORTH ELEVATION
1/8" = 1'-0"

ELEVATION FINISH TAKE-OFFS

WEST ELEVATION		
EIFS	1,054 SF	19%
CMU	458 SF	21%
BRICK	957 SF	45%
GLAZING	324 SF	15%
STONE	0 SF	0%
EAST ELEVATION		
EIFS	862 SF	24%
CMU	296 SF	8%
BRICK	2,037 SF	57%
GLAZING	371 SF	10%
STONE	0 SF	0%
NORTH ELEVATION		
EIFS	692 SF	22%
CMU	520 SF	16%
BRICK	1,659 SF	52%
GLAZING	288 SF	9%
STONE	0 SF	0%
SOUTH ELEVATION		
EIFS	406 SF	46%
CMU	0 SF	0%
BRICK	452 SF	51%
GLAZING	31 SF	3%
STONE	0 SF	0%

*THIS INCLUDES SCREEN WALLS, AND PARAPET SET BACK FROM FIRST WALL PLANE

EXTERIOR FINISH LEGEND

- EIFS - COLOR 1 - IMPACT RESISTANT
- EIFS - COLOR 2
- SANDSTONE - MATCH EXISTING
- HONED STRUCTURAL CMU - CREAM
- 4X4X16 EMPEROR BRICK VENEER

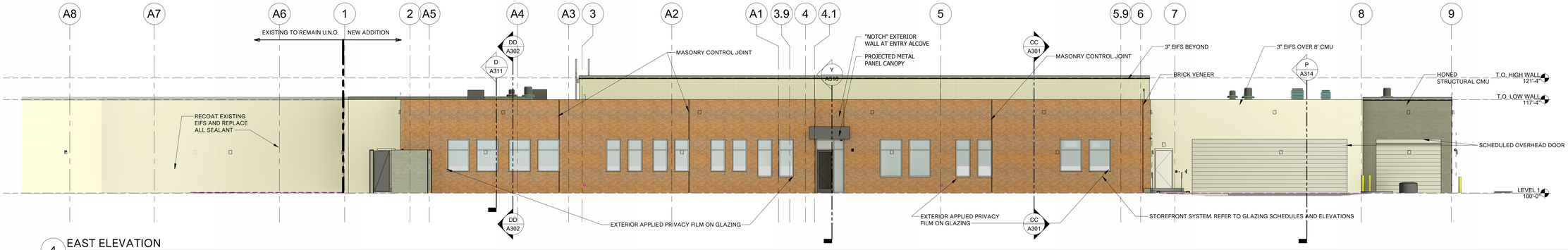

4 EAST ELEVATION
1/8" = 1'-0"

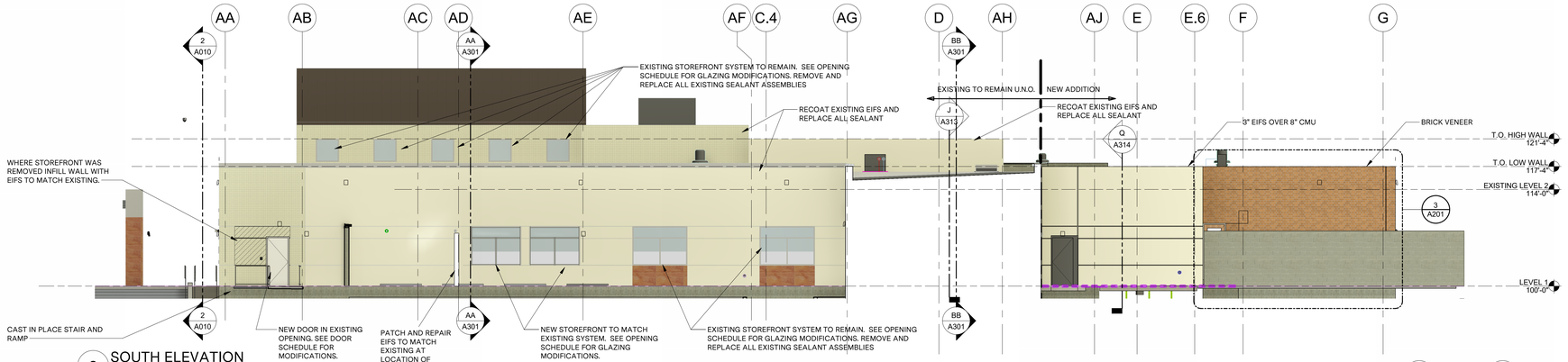

2 SOUTH ELEVATION
1/8" = 1'-0"

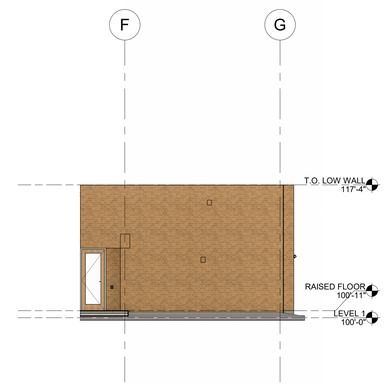

3 SOUTH ELEVATION BEYOND
1/8" = 1'-0"

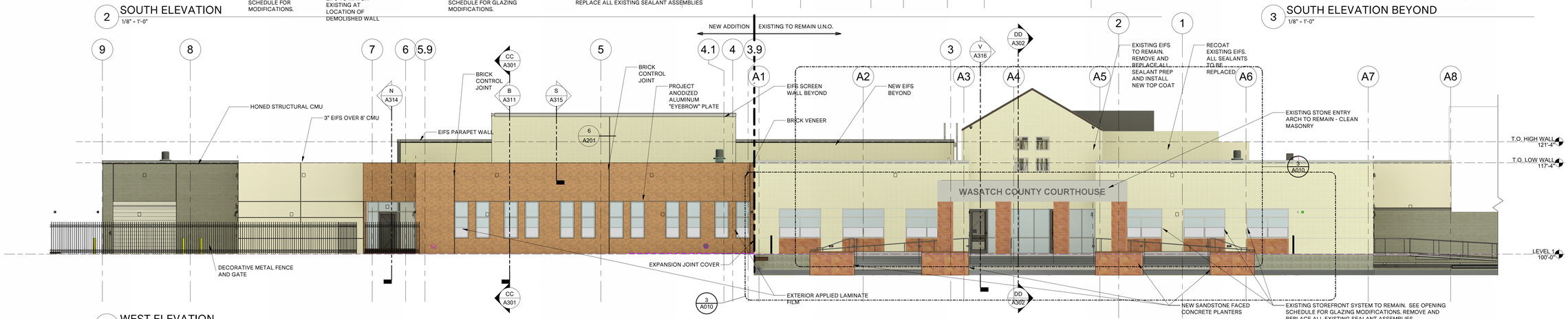

1 WEST ELEVATION
1/8" = 1'-0"

E D A

[A] The Boston Building
9 Exchange Place, Suite 1100
Salt Lake City, Utah 84111

[O] 801 531 7600

[E] info@edaarch.com

[W] www.edaarch.com

PROJECT ARCHITECT	JB
PROJECT MANAGER	SH

WASATCH COUNTY
COURTS EXPANSION

1361 US-40
HEBER CITY, UTAH 84032

PROJECT NUMBER	223053
# DESCRIPTION	DATE
DD SET	02.28.24
PERMIT REVIEW SET	04.24.24
FINAL BID PACKAGE	MM.DD.YY

BUILDING
ELEVATIONS

A201

24 MAY 2024

© EDA

5/17/2024 3:22:03 PM

Wasatch County Courts Expansion – Site Plan

Project Name:	Wasatch County Courts Expansion
Type:	Site Plan
P CODE:	**P137**
Date Submitted:	12/22/2023
Site Plan DRM Date:	04/17/2024
Commercial Concept DRM Date:	02/07/2024
Project Address:	1361 US-40
Project Owner:	Dustin Grabau
Company Name/ Agent:	-
Project Description:	Expansion of the County and State Courts wing at the Wasatch County Justice Center.

World Imagery

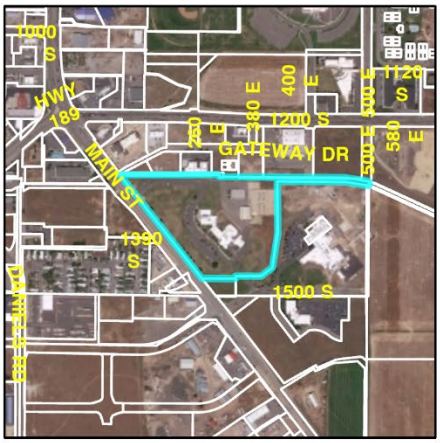

Zoning

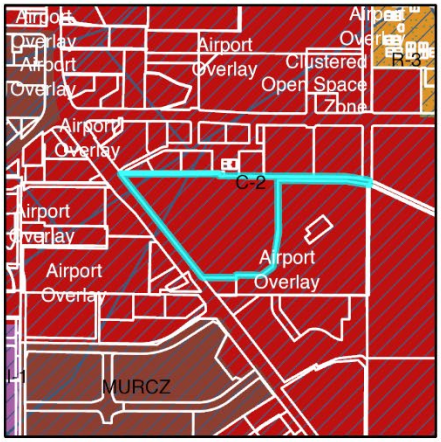

General Plan Designation

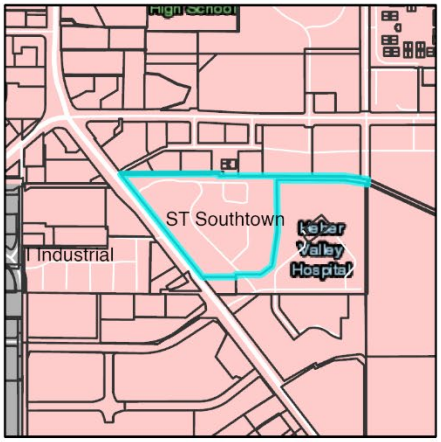

Acres:	16.36
Number of Lots	1
Parcel(s):	00-0009-2127
Current Zone:	C-2 (C-2 Commercial Zone) Airport Overlay, Horizontal Surface
General Plan Designation:	ST Southtown
Current Use:	Existing Courthouse
Adjacent Uses:	North: DABS Utah State Liquor Store East: Heber Valley Medical Center South: Hwy 40 West: Hwy 40
Planning Commission Date:	-
City Council Date:	-
Land Use Authority:	Planning Commission

Action Type: Administrative/Legislative
Planner: Aubrey Larsen, Landmark Design
Jamie Baron, Heber City Planning Manager

General Review

SITE PLAN CIVIC REVIEW COMMENTS

Site Plan Review General Comments:

- Zoning designation change will determine which code requirements apply. Application generally meets C-2 and IPF zone requirements. Note that in the C-2 Zone:
  - Any use on a parcel larger than 5 acres and any use with a building footprint larger than 60,000 square feet in the C-2 zone shall become a conditional use. (16.36 acres and 65,381 SF).
  - All buildings and structures shall conform to the requirements of the adopted Heber City C-2/C-4Design Standards and Guidelines.

18.76.030 Landscape Standards

- Automated water-wise irrigation systems are required and shall include a Water Sense labeled smart irrigation controller which automatically adjusts the frequency and/or duration of irrigation events in response to changing weather conditions. All controllers shall be equipped with automatic rain delay or rain shut-off capabilities. **VERIFY IRRIGATION CONTROLS MEET STANDARD - VERIFIED**

18.78.040 Lighting Standards

- C-2 Design Guidelines require black, fluted poles
  - **WILL BE VERIFIED BY THE APPLICANT - VERIFIED**
- 2. Height – All fixtures shall be mounted no higher than 16 feet. **NEED TO CLARIFY THE HEIGHT - VERIFIED**
  - **FROM APPLICANT: ALL LIGHT FIXTURES SHALL BE MOUNTED NO MORE THAN 16' ABOVE GRADE MEASUREDTO LENS**
- 6. All lighting fixtures shall be 3000 K or less in color. **5000k IS TOO HIGH – HAS BEEN CORRECTED**
  - **FROM APPLICANT: ALL LIGHTS WILL BE PROVIDED WITH A TEMPERATURE RATIO OF 3000K**
- 8. All non-residential exterior lighting shall be shut off during non-business hours. **WILL LIGHTING BE SHUT OFF DURING NON-BUSINESS HOURS? – OK TO REMAIN ON FOR SECURITY**
  - **FROM APPLICANT: FIXTURES WILL HAVE HIGH/LOW MOTIN SENSORS BUT WILL REMAIN ON FOR SECURITY**

4/17 Site Plan DRM Notes:

- If pursuing a zone change - zone map amendment application – goes to planning commission. **LIKELY NOT TO PURSUE AT THIS TIME, WILL NEED TO REVIEW THE C-2 DESIGN STANDARDS – APPLICANT HAS SINCE APPLIED FOR ZONE ADJUSTMENT**
- Check that the concept application has a CUP. **NOT SEEING ONE – PART OF SITE PLAN APPROVAL**

COMMERCIAL CONCEPT CIVIC REVIEW COMMENTS

- Please provide the building area and floor space – **65,381 SF**
- Please provide a data table with uses, density, landscaping calculations, and a parking analysis (Government buildings shall provide at least three (3) parking stalls per 1,000 square feet of floor area. How many total stalls are provided? How many are ADA?) - **PROVIDED**

2/7 Commercial Concept DRM Notes:

- EDA Architects/Ensign Engineering
- Light gray is existing Wasatch County Building (more than just court use).
- This project renovates the existing court portion and adds new court rooms and attorneys' offices.
- Public and staff parking areas (county attorney is separate from the public). Sally port for bring detained individuals.
- 1994/1995 is when the building was constructed. A number of inherited conditions. Trying to make the design approach relate with what is there and respond to the city ordinances.
- Recommendation that 1500 South be restriped on the west bound to provide a dedicated turn lane (from traffic study).
- There will not be food prep locations added to the building.
- Installing pond on north.

Code Review

18.14 Permitted and Conditional Use Application Requirements
18.14.010 Purpose And Intent
The purpose of this chapter is to establish an administrative review process by which permitted and conditional use applications, including required site plans are processed and approved.

18.14.020 Site Plan Approval Required
Site plans are required for all permitted uses and conditional uses.

18.14.30 Land Use Authority Review
All permitted and conditional uses that anticipate building on a property shall submit an application to the Land Use Authority as designated below.

A. Permitted Uses: Permitted use applications are processed by the Planning Department.

1. Through an optional Design Review meeting with relevant entities/agencies having jurisdiction over the property. Upon receipt of a complete application the staff reviews the site plan.
2. Applications for individual houses in subdivisions that have been processed by Heber City have an abbreviated list of requirements, as per the required application.

B. Conditional Uses: Conditional uses applications are reviewed in an optional Design Review meeting with the relevant entities/agencies having jurisdiction over the property and the staff. Complete applications will be then reviewed, approved, approved with modifications or conditions, or denied if the application does not meet written City standards, by the Planning Commission. When approved, the applicant must submit building plans for review and approval. All applications are coordinated with entities having jurisdiction or provide a service to the property(s).

18.14.040 Approval Criteria

To promote appropriate development of property within the City, no application for a permitted or conditional use review shall be approved unless it is demonstrated that the application meet the standards of Title 18. In considering any site plan, the Planning Department or the Planning Commission shall ensure that the requirements of this title have been met.

18.14.050 Application Submittal

A. A pre-application meeting with the Planning Department is suggested prior to the complete application submittal. A permitted or conditional use site plan review may be initiated by an owner of any property or any person, firm or corporation with the written consent of the owner of the property. An application shall supply sufficient information about the development to assist the Planning Department and/or Planning Commission is making a decision on the application.

B. An application for a Permitted or Conditional use review shall be submitted on forms provided by the Planning Department and shall expire 18 months after submittal, if not acted upon, provided however, the Planning Director may extend the application for six months for just cause. All applications (including but not limited to architectural elevations/renderings, etc.), and subsequent submittals and revisions, shall be submitted with a full-scale set of PDF of the respective plans. Information supplied shall include text, plans, and illustrations as identified on the application form, available online and at the City offices, and generally as listed below:

1. The application shall be signed by the landowner, applicant or duly authorized representative and shall be accompanied by the necessary fee as shown within the applicable fee schedule.
2. Inventory of general land use types located within the project.
3. Locations and arrangements of buildings, structures, facilities and open space.

4. Architectural rendering of proposed buildings including the height, bulk, and character, structures, facilities and open space within the project. Building materials and colors are also required.
5. Access and traffic circulation patterns, the provision for ingress and egress, and provision for off-street parking.
6. The existing site characteristics (e.g., terrain, vegetation, watercourses, and wetlands, etc.).
7. Written explanation and visual illustration showing project density and mass/scale.
8. If signs are proposed, the application shall include a comprehensive sign plan in accordance with Chapter 18.104.
9. An application shall include conceptual landscaping, fences, and walls designed to further the purpose of the regulations for commercial, manufacturing, and multiple housing zones, and such features shall be provided and maintained as a condition of the establishment and the maintenance of any use to which they are related to.

Permitted or Condition Use Application Submittal Requirements	
Complies?	**Requirements**
yes	1. The application shall be signed by the landowner, applicant or duly authorized representative and shall be accompanied by the necessary fee as shown within the applicable fee schedule.
yes	2. Inventory of general land use types located within the project.
yes	3. Locations and arrangements of buildings, structures, facilities and open space.
yes	4. Architectural rendering of proposed buildings including the height, bulk, and character, structures, facilities and open space within the project. Building materials and colors are also required.
yes	5. Access and traffic circulation patterns, the provision for ingress and egress, and provision for off-street parking.
yes	6. The existing site characteristics (e.g., terrain, vegetation, watercourses, and wetlands, etc.).
yes	7. Written explanation and visual illustration showing project density and mass/scale.
N/A	8. If signs are proposed, the application shall include a comprehensive sign plan in accordance with Chapter 18.104.
yes	9. An application shall include conceptual landscaping,

	fences, and walls designed to further the purpose of the regulations for commercial, manufacturing, and multiple housing zones, and such features shall be provided and maintained as a condition of the establishment and the maintenance of any use to which they are related to.

18.14.060 Technical Review

A. Process: The City periodically hosts a Design Review meeting. In order for a application to be scheduled for a design review meeting, a complete application must be received and accepted by the City. The Planning Department coordinates the Design Review meeting and scheduling.

B. Meeting With Representatives: The applicant is provided an opportunity to meet with representatives from, the Planning Department and all applicable utilities and other interested governmental agencies to receive comments regarding the application as part of the Design Review meeting. At this meeting the applicant will receive comments from the attendees. These comments are verbal or sketched on the site plan. The intent of these comments is to detail the extent to which the plans are required to be revised in order for the City to progress the application through the review process. Extensive revisions caused by the Design Review attendees or by voluntary action of the applicant, may require additional Design Review meetings.

18.14.070 Conformance To Application Site Plan Approval Requirements

A. The applicant/owner and any assigns or successors in interest, is required to develop only in accordance with the proposals outlined and approved in the application. Any materially different concept, use, building arrangement, etc., will not be approved for building permits until such plan is reviewed and considered for an amendment by the Planning Staff or

B. Planning Commission. Minor changes to an approved application/site plan may be approved by the Planning Director or designees that are consistent with the intent of the original approval, so long as such changes do not constitute more than 5% of the original project area. Any changes shall be approved only if the modifications include improved or equivalent quality of materials or design. Any proposed changes that exceed 5% of the project area or that are deemed materially significant by the Planning Director shall require a formal amendment to the site plan and in the case of conditional uses an approval by the Planning Commission.

C. When the final application has been corrected and/or includes all requirements and conditions required by this process, the plans shall be stamped by a representative from Planning Department, as final and the developer may proceed to obtain building permits.

D. Guarantees of public improvements are required per the Subdivision Ordinance of the Heber City Code.

18.14.080 Development Standards For Specific Zoning Districts
In addition to the standards contained in this chapter, other development standards are found in this Title including the individual zones, and the Heber City Standards and Specifications.

18.14.090 Notice Of Decision

- The application approval shall be confirmed by written notations on the site plan, a revised/corrected site plan and/or a letter confirming the conditions as established by the Planning Commission.
- In the case of a Permitted Use or Conditional Use permit, the authorized applicant or the property shall sign the permit to assure agreement with the final approval and/or conditions as required.
- Failure to sign the final permit documents shall invalidate the permit.

18.14.100 Related Provisions

- General Provisions
- Administration
- Definitions
- Conditional Use Permits
- Off Street Parking and Loading
- Sign Regulations
- Lighting Chapter
- Enforcement
- Subdivisions

18.26 Institutional and Public Facilities Zone APPLICANT HAS SUBMITTED A REQUEST TO AMEND THE ZONING MAP TO CHANGE THE CURRENT ZONING DESIGNATION FROM C-2 TO INSTITUTIONAL AN DPUBLIC FACILITIES (IPF) ZONE

18.26.010 Objectives - Characteristics

A. The Institutional and Public Facilities (IPF) zone has been established for the primary purpose of providing a location where public and community buildings and facilities can be located and promotes the current and future use of such facilities.
B. This zone is intended to provide immediate recognition of such areas upon the official zoning map of the City, and to reduce the effect which the location of these facilities may have upon zoning statistics in residential, commercial, or industrial areas.
C. This zone is characterized by a mixture of public buildings, parks, schools, and other facilities meant for the use by the public and community.
D. In order to accomplish the objectives and purposes of this title and to stabilize and protect the essential characteristics of this zone, the regulations set out in this chapter shall apply in the IPF zone.

18.26.020 Permitted Primary Uses

The following buildings, structures and uses of land shall be permitted in the IPF Zone upon compliance with requirements as set forth in this Section:

A. Accessory buildings and parking lots incidental and accessory to other permitted uses;
B. Cemetery;
C. Museums, art galleries;
D. Hotels and convention centers;
E. The raising of farm animals, agriculture and farming;
F. Storm water and flood protection facilities;
G. Sporting complexes, training facilities and associated housing;
H. Performing art center;
I. Private and public schools;
J. Solar and wind farms;
K. Telecommunication facilities;
L. Wildlife areas;
M. Churches;
N. Fairgrounds;
O. Event Centers;
P. Hospitals;
Q. Public Parks;
R. Public buildings;
S. Public utility buildings, storage yards and associated structures (not including commercial storage sheds or outdoor commercial storage areas);
T. Recreation buildings and facilities;
U. Schools, Colleges, Universities;
V. Scenic railroads and railroad maintenance yards;
W. Water wells, utility transmission and distribution lines, dams, pumping plants, power plants, substations, sewage treatment plants.

18.26.025 Permitted Secondary Uses

The following buildings, structures and uses of land shall be permitted in the IPF Zone upon compliance with requirements as set forth in this Section. Secondary uses must accompany a primary use on the same lot or within the same building. The existence of secondary uses shall not limit the operation or extent of permitted primary uses within the IPF Zone.

A. Nursery, day care, or preschools in support of a primary activity.
B. Public Facilities for Special Events. Public Facilities for Special Events is defined as follows: A parcel used for overnight parking and lodging using RVs, travel trailers, temporary housing units, in conjunction with governmentally sanctioned, or sponsored public events.
C. Recreational Vehicle Courts compliant with Chapter 18.96

18.26.030 Area Requirements

A. There is no minimum lot area requirement and no maximum building size in the IPF Zone.
B. Each project approved under this section must be fully located within the IPF Zone.

18.26.040 Setback Requirements

In the IPF Zone, all buildings shall be set back at fifteen (15) feet from any public street right-of-way line. In the event of competing set back requirements as a result of building code restrictions, the most restrictive shall govern. **OK**

18.26.050 Height And Size Requirements

All buildings in the IPF Zone shall be limited in height to forty-five (45) feet. Height may exceed this limit, provided the building is setback from each property line one horizontal foot for each vertical foot in height.

18.26.060 Special Provisions

A. A 10 foot wide landscaping strip shall be provided along each street right of way, which shall be planted with a mixture of evergreen and deciduous trees, spaced on average no further than one tree for each twenty-five (25) feet of street frontage. **OK**
B. Sidewalk shall be installed according to City standards along the property's street frontage. **OK**
C. RV Parks shall be screened from existing residential development with a masonry fence 8 feet tall.
D. All outdoor lighting shall be shielded to direct light and glare only onto the premises and shall be consistent with Chapter 18.78 Lighting.
E. The storage of goods and materials within 50 feet of a public street shall occur within a building or behind an eight foot tall sight obscuring fence.

18.28 C-2 Commercial Zone (Commercial Zones) APPLICANT HAS SUBMITTED A REQUEST TO AMEND THE ZONING MAP TO CHANGE THE CURRENT ZONING DESIGNATION FROM C-2 TO INSTITUTIONAL AND PUBLIC FACILITIES (IPF) ZONE

18.28.010 Purpose And Objectives

A. The C-2 commercial zone has been established to facilitate the development of attractive entrances to the city. To reduce the conflict between commercial and residential uses along principal highways and streets adjacent to the central commercial districts and to facilitate the orderly expansion of commercial uses out from the central commercial district. Incorporating some of the historical architectural styles evident on Main Street is suggested for development in the C-2 zone.

B. The C-3 central commercial zone has been established as a district in which the primary use of the land is for business purposes. The area covered by this zone is the historical core area

encompassing Main Street and adjacent blocks, which acts as the dominant shopping and financial center for the city and surrounding territory. For this reason, the zone has been located in the central part of the city where the street pattern makes the business buildings readily accessible to all parts of the city and surrounding region and where business and shopping activities can be carried on with maximum convenience. The C-3 zone is characterized by wide, clean, well-lighted streets, and ample pedestrian ways for the convenience and safety of the public.

C. The C-4 general commercial zone has been established as a district in which the primary use of the land is for business, recreation, and hospitality purposes.

18.28.020 Application Requirements
All permitted and conditional uses are required to submit a site plan as part of an application that is available online and at the City offices.

18.28.030 Permitted And Conditional Uses
The following chart describes the uses that are appropriate in each commercial zone: A. Symbol definitions: P = PERMITTED USE (P) A site plan application is required with staff processing. Site plan applications are approved, when and if they meet the ordinance standards. C = PLANNING COMMISSION CONDITIONAL USE REVIEW (C). A site plan application with Planning Commission review is required. Blank means prohibited.

B. If a use is not specifically designated below, then it is prohibited.

C. All uses listed in the use table and that require a building permit shall also require a site plan application.

Commercial Zones Permitted Use Table

LAND USE	C-2	C-3	C-4	Limitations
Caretaker dwelling	P		P	
Kennels, if located more than 400' from a residential zone	C			
Home Occupations	P	P	P	
In-Home Daycare/Pre-School	P	P	P	
Mixed uses within a building	C	C	C	*50% of the street-facing ground floor required to be commercial, service, or office uses*
Bed and Breakfast Inns	P	P	P	As regulated by Section 18.108.034
Religious institutions, schools (public and private) and other public buildings	P	P	P	
Commercial Day Care Center and/or Pre-School	C	C	C	
Group Homes	P	P	P	
Fraternity/non-profit buildings, clubs, lodges	P	P	P	
Funeral establishments, mortuaries and wedding chapels;	P	P	P	
New and Used car lots	C			No car lots permitted north of 600 South

18.28.040 Development Standards

A. In the Commercial Zones, there shall be no area, width and location requirements except that all buildings and structures shall conform to the requirements of the adopted Heber City C-2 and C-4, and C-3 Design Standards and Guidelines.

B. Height shall be a maximum of three stories, not to exceed 46 feet for the C-3 zone. In the C-2 and C-4 zones, height may be increased to 4 stories, not to exceed 55 feet if all of the following standards are met:

   1. The application includes at least 10% percent affordable housing, available to persons at 60% of the current County Average Median Income (AMI) or below that threshold.
   2. If it is a mixed-use building.
   3. If the building design includes a step back of a least ten feet between the second and third stories.

C. Any use on a parcel larger than 1 acre in a C-3 or C-4 zone or any use with a building footprint larger than 30,000 square feet, shall become a conditional use.

D. Any use on a parcel larger than 5 acres and any use with a building footprint larger than 60,000 square feet in the C-2 zone shall become a conditional use.

18.28.050 Additional Regulations

The following provisions apply within the Commercial Zones:

A. For buildings within the C-2 and C-4 zone, a strip of land at least fifteen feet in width adjacent to all public streets shall be landscaped as set forth in Chapter 18.76 of this title except for permitted driveways, except as required by the Heber City C-2 and C-4 Zone Design Standards and Guidelines. Buildings in a C-3 zone shall be located within a 15' "build to" zone which allows for outdoor gathering and dining to occur for certain uses but also allows the building to locate adjacent to the public ROW.

B. No dust, odors, smoke, vibration or intermittent light, glare or noise shall be emitted which is discernible beyond the premises except for normal traffic movement.

C. Storage of all merchandise, material and products shall be carried on within a building or within an area enclosed with a sight-obscuring fence or wall except for licensed vehicles in running order.

D. All off-street parking shall be hard-surfaced as regulated by Chapter 18.72.

E. All buildings located adjacent to major streets shall have at least one entrance way facing onto said street.

F. Sale material may be displayed on business premises during normal working hours.

G. See 18.76.050 for building setbacks adjacent to residential use

18.28.060 Gross Floor Area Of Buildings Limitations For Retail Business

A. **C-2 Zone.** No floor area limitation.

B. **C-3 Zone.** Retail establishments shall not exceed 60,000 square feet of gross first floor area, considered the building footprint, within the C-3 Zone. As per section 18.28.040 (4), all buildings in the C-3 zone that exceed a 30,000 square foot footprint, be a conditional use

C. **C-4 Zone**. No floor area limitation.

18.28.070 Gasoline Pump Island Locations And Lighting

Gasoline pump islands shall be set back from any right-of-way line to accommodate the landscape setback and proper circulation/stacking for the pumps. Each pump shall provide stacking for a minimum of two standard sized vehicles defined as 20' for each. A circulation aisle beyond the stacking area is required that allows for a circular traffic movement. Pump islands shall be so located that automobiles stopped for service will not extend over the property line. In no case shall pumps be set closer than twelve feet from any street lines, nor closer than ten feet from any side or rear property line. Lots from which gasoline is dispensed to customers at retail shall be not less than seventy-five by one hundred feet in size. Canopies over pump islands may extend to the closest edge of any required landscaping. Any above ground fuel tanks such as propane tanks shall be located with a minimum setback from the ROW as per the IBC or 30' whichever is greater. See the Lighting Chapter 18.78, for lighting standards.

18.28.080 Related Provisions

- Chapter 18.12 Administration

- Chapter 18.08 Definitions
- Chapter 18.68 Supplementary Regulations
- Chapter 18.108 Conditional Use Permits
- Chapter 18.72 Off Street Parking and Loading
- Chapter 18.103 Sign Regulations
- Chapter 18.78 Lighting
- Chapter 18.174 Enforcement
- ~~Chapter 17 Subdivisions~~
- Heber City C-2 and C-4 Zone Design Standards and Guidelines (Also See Exhibit A in Ordinance 2023-06 below)
- ~~Heber City C-3 Zone Design Standards and Guidelines (Also See Exhibit A in Ordinance 2023-06 below)~~

18.72.030 Parking Space Requirements -- Designated

A. The following required off-street parking spaces for the particular use are minimum requirements:

1. Auditoriums, sports arenas and places of assembly shall have one parking space per two people;
2. Banks, professional offices, retail stores, personal service shops, medical clinics and other business buildings not specifically mentioned elsewhere in this section shall have four parking stalls per 1,000 square feet of net floor area;
3. Boardinghouses shall have one parking space for each one hundred square feet of floor space devoted to bedrooms or one space for each two persons domiciled in the premises, whichever is greater;
4. Bowling Alleys shall have four (4) parking stalls per lane.
5. Churches shall have one parking space per three seating spaces in the main assembly room;
6. Commercial recreational uses shall have one parking space per two patrons, based on the design capacity of the facility;
7. Convalescent, nursing and other institutions shall have one visitor parking space per three patient beds, plus one parking space for each employee at work in the home during daylight hours;
8. Day Care facilities shall have one (1) parking space for each employee plus one (1) loading/unloading space for every 20 people, or portion thereof enrolled. Loading space requirement may be eliminated if there is a circular drive-way. 9.
9. Drive-ins (retail) shall have at least twelve off-street parking spaces or sufficient off-street parking spaces to accommodate all patrons or customers, whichever is greater. No patron or customer may be served in automobiles which are parked on public streets;

10. Government buildings shall provide at least three (3) parking stalls per 1,000 square feet of floor area; **OK**
11. Grocery stores shall have at least 1 parking stall per 300 square feet of net floor area;
12. Hospitals shall have one visitor parking space per two patient beds, plus one parking space for each employee at work in the hospital during daylight hours;
13. Hotels and motels shall have one parking space per room or suite, plus one parking space for each employee at work on the premises during daylight hours;
14. Industrial, manufacturing and wholesale establishments shall have one parking space per two employees based. on the largest shift;
15. Mortuaries or funeral parlors shall have thirty parking spaces or one space for each twenty-five square feet of floor space in all assembly rooms, whichever is greater;
16. Parks shall have parking as follows:
    a. As each park is designed, an evaluation of parking demand based on size, functions and features of the park, available on street parking within two blocks, and opportunities for shared parking with adjacent uses and such uses within two blocks, is to be completed by the park designers and coordinated with City staff. When considering complex parks with many functions, it is anticipated that on-site parking will not meet the entire demand of the combined functions for peak time periods. In parks with more than three functions, an overall reduction of 30% of the additive parking demands for each function is recommended. As the park is designed, any parking recommendations shall supersede the recommendations in number D. below.
    b. Local parks smaller than 2 acres shall be considered “walkable” parks and are not required to have parking, however, on-street parking for 8 vehicles shall be available within two blocks.
    c. Park parking shall be reviewed by the Parks Department using their experience with existing parks and may recommend different parking standards.
    d. Parking demand shall be evaluated by function using the general recommended standards:
        1. Pavilion – 1/5 of seating capacity
        2. Play Structure – based on an estimate of use/capacity, 1 space for every 5 users
        3. Picnic Area - one space for every two tables

4. Baseball/Softball Field – 10 per diamond
5. Passive Lawn area – 3 per acre
6. Multi-sport field (soccer lacrosse, rugby, etc.) – 12 per field
7. Tennis/pickle ball courts - 2 per court
8. Outdoor Basketball/sport court – 2 per court
9. Recreation/Community Center – based on seating, interior functions, and square footage
10. Trail Head – five spaces
11. Amphitheater – based on 1/4 of seating capacity
12. Dog park – 4 per acre

17. Private clubs and lodge halls shall have one parking space per two persons based on the design capacity of the facility;
18. Residential structures, not including boardinghouses and rooming houses shall have parking spaces per dwelling units as follows:
    a. One-family dwellings, including townhomes, detached single family dwellings and semi-detached single family dwellings and mobile homes, two spaces per dwelling unit;
    b. Multiple-family dwellings, two spaces per dwelling unit, which spaces shall be located on the side yards or rear yard or said lot. As a means of encouraging the occupants of multiple dwellings to use the required off-street parking space in preference to on-street parking space, entrances to buildings containing multiple dwellings shall be provided in locations that are as direct and convenient to the required off-street parking spaces as are the fronting streets;
19. Restaurants, taverns and lounges shall have one parking space per two hundred square feet of net floor area;
20. Theaters shall have one parking space per four seats;
21. Uses Not Mentioned. The required off-street parking for any building, structure or use of land of a type not listed in this section shall be determined by the board of adjustment. The board of adjustment shall be guided by comparison with the requirements for similar uses which are listed;
22. Designated Mixed Use Village Center Parking Requirements.

a. Designated Mixed Use Village Centers are shown on the map below.

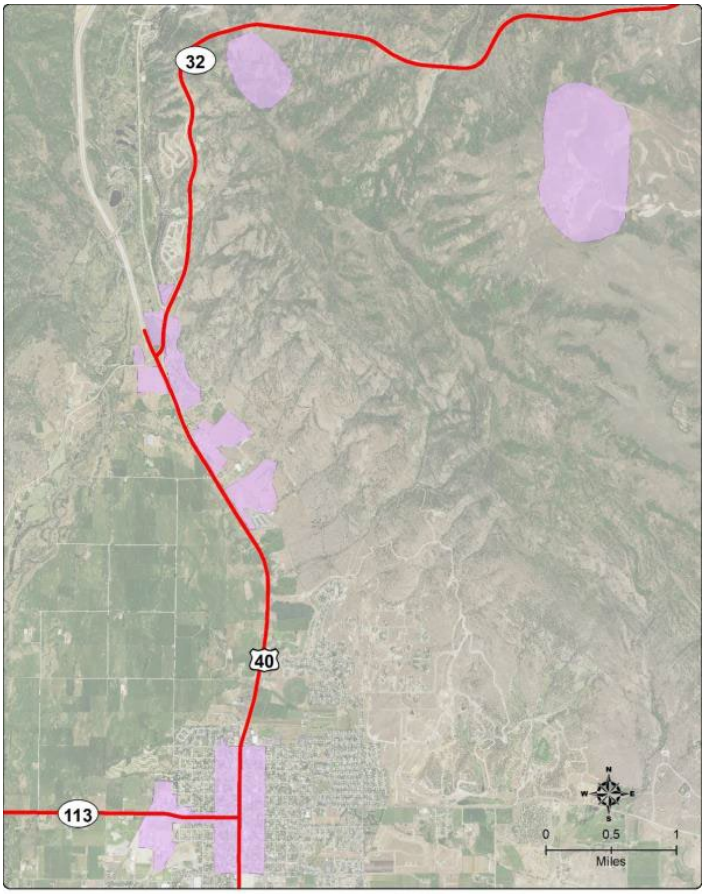

Designated Mixed Use Village Centers

Draft: 02/25/21

b. Designated Mixed Use Village Center Parking requirements for retail, office, restaurant and government uses is 3 parking stalls per 1,000 square feet.

c. Designated Mixed Use Village Center Parking requirements for multi-family residential units (condominiums and apartments) is as follows:

Unit Type	Parking Space Requirements	Notes
Studio Units	1.0 space per unit	25% of Parking stalls may be compact spaces
One Bedroom Units	1.25 spaces per unit	
Two Bedroom Units	1.5 spaces per unit	
Three Bedroom Units	2.0 spaces per unit	
Four Bedroom Units	2.0 spaces per unit	
Guest/visitor Parking	0.25 spaces per unit	

d. When there is insufficient area to provide the required number of off-street parking stalls for a property within a Mixed Use Village Center, the property owner may pay a fee-in-lieu to the Parking Authority in an amount equivalent to the value of the required parking stalls when approved by the City Council.

23. One-half (1/2) of available angled on-street parking along a parcel's frontage may be counted towards the requirements for meeting the off-street parking requirements for uses within a designated Mixed Use Village Center. 24. Street improvements shall include angled parking for those streets identified as having angled parking on the City's Master Plan or Zoning Ordinance;

B. Shared Parking. In determining the total requirements for shared parking facilities, the Planning Director or designee shall use the Shared Parking Table below, according to the following guidelines:

1. For each applicable general land use category, calculate the number of spaces required for a use as if it were the only use (refer to the schedule of minimum off-street parking requirements above).
2. Use the figures for each individual land use to calculate the number of spaces required for that use for each time period specified in the table (six time periods per use).
3. For each time period, add the number of spaces required for all applicable land uses to obtain a grand total for each of the six time periods.
4. Select the time period with the highest total parking requirement and use that as the total number of parking spaces required for the site on a shared parking basis.
5. If a new use is proposed for a building or portion of a building, the shared parking analysis shall be re-evaluated and additional parking provided, if shown as necessary.

C. For uses not listed in Table 18.72 (1), the Planning Director shall determine the required parking for the six time periods.

Shared Parking Table

General Land Use Category	Weekdays			Weekends		
	12:00 a.m.—7:00 a.m.	7:00 a.m.—6:00 p.m.	6:00 p.m.—12:00 a.m.	12:00 a.m.—7:00 a.m.	7:00 a.m.—6:00 p.m.	6:00 p.m.—12:00 a.m.
Office & Craftsman Industrial	5%	100%	5%	0%	5%	0%
Retail	5%	100%	80%	5%	100%	60%
Restaurant	50%	70%	100%	70%	50%	100%
Hotel	100%	65%	100%	100%	65%	100%
Residential	100%	50%	80%	100%	75%	75%
Theater/entertainment	5%	20%	100%	5%	50%	100%
Place of worship	0%	30%	50%	0%	100%	75%

D. Parking Lot Landscaping: For every third parking aisle, one (1) raised six (6) foot wide landscaped parking island with trees, bounded with slotted high back curb with defined

openings to allow for runoff shall be provided, thereby creating separated parking areas to aid in safe and orderly use of the lot and confine vehicular movement to marked drives. Raised or curved circulation islands of at least eight (8) foot width and planted with trees shall be constructed at the ends of the rows of parking spaces at locations where circulation drives intersect, and for every 20 parking spaces. Parking lots shall be bounded with a high back curb that includes openings for stormwater runoff. Paved areas and parking lots shall be separated from buildings with a minimum four foot (4') wide landscape area bounded with a slotted high back curb or a five foot (5') raised sidewalk.

E. Street and Parking Lot Lighting: Parking lot lighting shall be mounted on black poles, and be dark sky compliant. Parking lots with less than 3 aisles may alternatively light the parking lot with lighting attached to the building. In no case shall the poles exceed 16 feet in height. Lighting shall be directed to avoid intrusion on adjacent residential properties and away from adjacent thoroughfares and shall be downward directed and fully shielded.

F. Parking Stall Size. Each off-street parking space shall be at least 9 feet by 18 feet for diagonal or ninety-degree spaces, or 8 feet by 23 feet for parallel spaces, exclusive of access drives or aisles. Compact parking stalls shall be a minimum of 8 feet by 16 feet for diagonal or ninety-degree spaces, or 8 feet by 21 feet for parallel spaces, exclusive of access drives or aisles. Parking stalls adjacent to a column or wall must have an additional 2 feet of width to accommodate ingress/egress from the vehicle. Access to parking spaces shall be from private roadways and not from public streets. The Planning Director or designee may consider modifications to stall width and length requirements for up to 15% of the stall dimensions.

1. Standard and Compact Parking Stalls

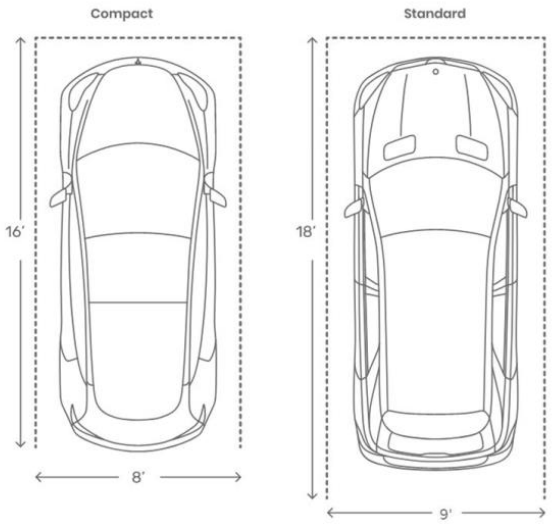

G. Parking Lot Locations and buffering from the street. Parking lots shall be separated from the right-of-way property line with a minimum width 6' landscaped area, unless the zoning ordinance requires a larger separation elsewhere. Such landscaping shall include trees and shrubs to minimize the visual impact of the vehicles. Such areas shall accommodate stormwater, but without a depression greater than 1 foot. H.

H. Snow Storage. Sufficient area shall be provided adjacent to uncovered parking lots for snow storage as recommended by the design engineer.

I. Tandem Parking. Tandem parking stall placement is not permitted for required parking stalls. Example of Tandem Parking shown in diagram below.

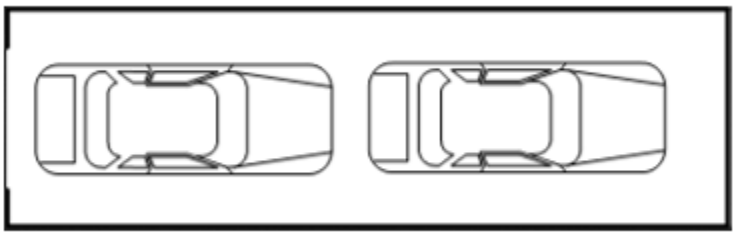

J. Garage Door Setback. Garage doors facing a public right of way shall be setback at least 22 feet from a public right of way property line, unless a larger setback is required elsewhere in the zoning ordinance.

18.72.040 Parking Space Requirements -- Location And Control

A. The off-street parking facilities required by this chapter shall be located on the same lot or parcel of land as the use they are intended to serve, except within designated Mixed Use Village Centers when approved by the Planning Commission, or where a Parking Authority has a policy providing off-street parking for an area. Any required parking stalls provided off-site shall be located within ¼ mile of the property they are intended to serve.

B. Individual stalls shall not be directly accessed from the street, unless approved by the Planning Commission when it can be shown that such allowance:

1. Results in a decrease in the overall hard surface area;
2. Makes more efficient use of the right of way and private land; 3.
3. Protects a landscaped area;
4. Provides at least the number of parking stalls required by this parking ordinance;
5. Results in a safe traffic movement as determined by the City Engineer; and 6.
6. Is not located along an Arterial or Collector Street as designated on the City's Master Transportation Plan.

18.72.050 Parking Space Requirements -- Combined Parking Area
The required off-street parking and loading facilities may be provided collectively for two or more buildings or uses, provided that the total number of parking spaces shall generally be the sum of the requirements for each of the individual uses, unless modified by the shared parking table above.

18.72.060 Parking Space Requirements -- Mixed Uses
In the event that two or more uses occupy the same zoning lot or parcel, if land, the total requirements for off-street parking and off-street loading space shall be the sum of the requirements of the various uses computed separately, but shall use the shared parking table above for a final calculation.

18.72.070 Access To Parking Facilities
Access driveways shall be provided for ingress to and egress from all parking and loading facilities. Each parking and loading space shall be easily accessible to the intended use. Driveways shall be dimensioned at minimum as shown below.

A. 90 degree double loaded driveway.

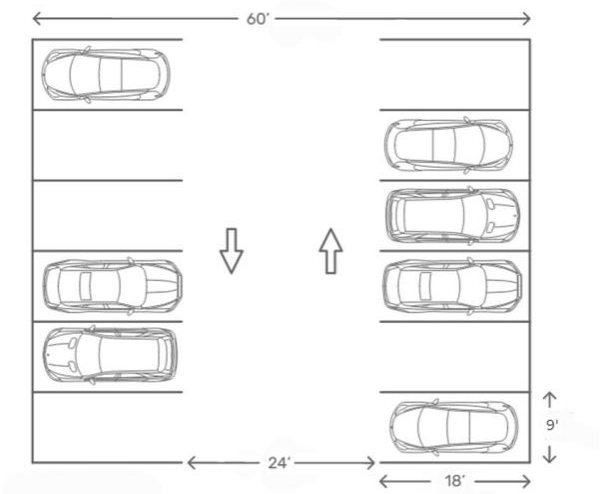

B. 60 degree parking spaces

C. 45 degree parking spaces

D. 30 degree parking spaces

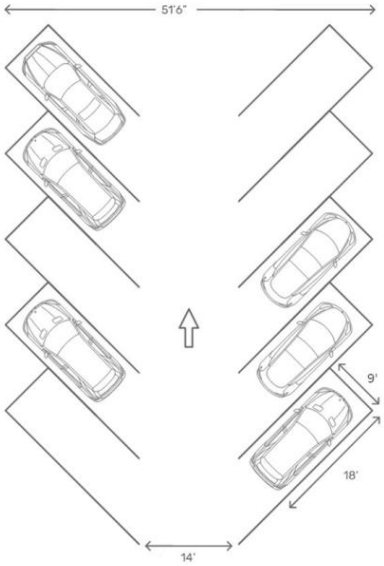

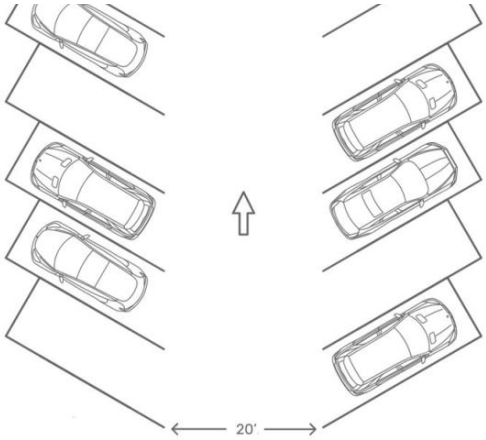

E. Parallel parking spaces

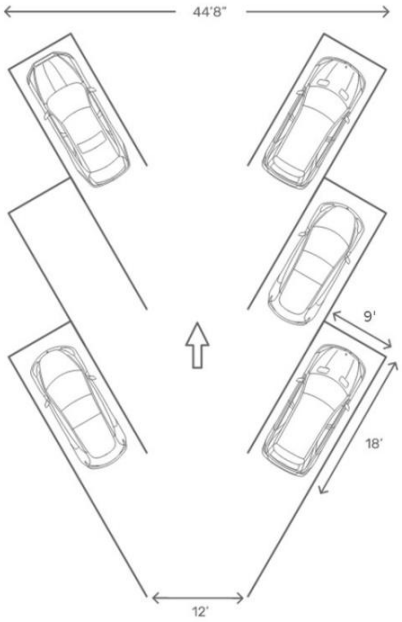

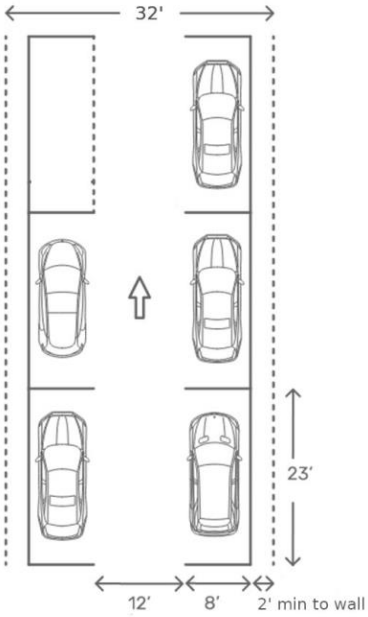

18.72.080 Circulation Within Parking Areas And Between Parking Areas

A. Circulation within a parking area shall comply with the following requirements:

1. Parking area with more than one aisle must be so arranged that a car need not enter the street to reach another aisle within the same parking area.

2. Directional signs shall be required to differentiate between entrance and exit access points to the street.

B. Circulation between separate parking lots on adjacent parcels, shall comply with the following:

1. Vehicular access between separate parking lots is required to provide the ability for patrons to park only once for multiple tasks.
2. Pedestrian accommodation between separate parking lots is required.
3. Adjoining property owners with shared parking lots shall have parking agreements addressing rules and maintenance of the parking lot area, lighting and striping.

18.72.090 Location Restricted
Parking and loading facilities may be located any place on the premises except for areas that are required to be landscaped. Off- street parking space which is required in connection with a use shall be construed to be part of that use and shall not be located within a zone unless expressly permitted therein.

18.72.110 Continuing Obligation To Provide Spaces
The required off-street parking and loading facilities shall be a continuing obligation of the property owner so long as the use requiring vehicle loading facilities continues. It is unlawful for an owner of any building or use to discontinue or dispense with the required vehicle parking and loading facilities without providing other vehicle parking or loading area which meet the requirements of this chapter.

18.72.120 Plot Plan Approval Required
At the time a building permit is requested for any building or structure, or at the time the use of land is changed which requires additional off-street parking space, a plot plan shall be submitted showing the location and layout of such required space along with access aisles, roadways, lighting, conceptual stormwater retention, snow storage areas, curbs and curb cuts. The zoning administrator shall disapprove such plans if the required spaces are not usable for standard-sized automobiles or do not comply with the requirements for off-street parking as set forth in this chapter.

18.72.140 Loading Space Requirements
For every building having a gross floor area of five thousand square feet or more to which goods, material, merchandise or supplies are received or distributed by vehicle, there shall be provided at least one off-street loading space. One additional loading space shall also be provided for each additional twenty thousand square feet of gross floor area of such building or for each vehicle which must be loaded or unloaded at the same time, whichever requirement is greater. Each required off-street loading space shall be not less than ten feet in width, twenty-five feet in length, and fourteen feet in height.

18.76 Landscaping

18.76.010 Purpose Of Provisions

The purpose of the landscaping requirements in this chapter shall be to enhance, conserve and stabilize property values by encouraging pleasant and attractive surroundings and thus create the necessary atmosphere for the orderly development of a pleasant community. Landscaping also contributes to the relief of heat, noise and glare through the proper placement of green plants and trees.

18.76.020 Scope Of Requirements

Where landscaping is required, such landscaping shall comply with the requirements set forth in this chapter. Where there may be contradicting landscaping provisions between this chapter and other sections of code, the greater requirement shall apply.

18.76.030 Landscape Standards

A. General Provisions:

1. The absence of any landscaping (bare ground, dirt) is prohibited. **OK**
2. Xeriscaping is permitted in all zones. **OK**
3. Natural landscaping using plants found locally that are drought resistant are permitted for required yard spaces and open space areas. **OK**
4. Vegetation coverage is measured by the area of the plant at full seasonal coverage. Trees do not account for this area. Areas with non-living landscaping materials that are greater than 200 square feet shall include at least one tree for shade to reduce summer heat gain. **OK**
5. Landscaped areas such as park strips, that are less than 8’ wide shall only use drip/point source irrigation systems and shall contain 100% xeriscape designs. **OK**
6. Water-wise designs are required, using drip/point source irrigation systems wherever possible. **OK**
7. Water from roofs, driveways, and parking lots shall be contained on site to the greatest extent possible. **OK**
8. Healthy trees that are drought tolerant are encouraged to be preserved. **OK**
9. Stormwater catchment basins and/or ponds are exempt from these general provision requirements. **OK**
10. Existing front and corner lot yards shall meet the standards of this Section upon redevelopment of the property. **OK**

B. Non-Residential and Multi-Family Residential Standards.

1. A minimum of 20% of landscaped areas shall be planter beds, containing a combination of rock or bark mulch, trees, shrubs, and ornamental grasses. **22.8% PROVIDED**
2. A minimum of 40% of all landscaped areas shall be covered with planted vegetation. **OK**
3. ~~Community Gardens may be counted toward a landscaping and/or open space requirement for Multi-Family Residential developments~~.
4. Automated water-wise irrigation systems are required and shall include a Water Sense labeled smart irrigation controller which automatically adjusts the frequency and/or duration of irrigation events in response to changing weather conditions. All controllers shall be equipped with automatic rain delay or rain shut-off capabilities. **VERIFY IRRIGATION CONTROLS MEET STANDARD**
5. Landscaping shall be completed prior to the issuance of a Certificate of Occupancy. For phased developments, the landscaping within each phase shall be completed with the phase. **OK**
6. No more than 20% of any front yard, including both yards on a corner, shall be landscaped with turf/lawn. Non-turf areas are required to be watered via a drip system. Decorative pools/ponds/or streams are discouraged and are limited to no more than 5% of a lot. This standard does not apply to recreational activity areas. **OK**
7. A landscaping bond may be used during non-growing seasons, as determined by the Planning Director or designee. Landscaping shall be completed, and assurances established prior to a Certificate of Occupancy is granted as per Utah State Code Section 10-9a-509 (i) et seq. Bonds shall cover 110% of the costs of the bond estimate included in the bond agreement executed with the City. **OK**

~~C. Single Family Residential Standards.~~

1. ~~In any residential or residential-agricultural zone, all portions of the required front and side yards adjacent to a street that are not covered by permitted structures, driveways or pedestrian paths shall be landscaped. No more than 35% of any front yard, including both yards on a corner, shall be landscaped with turf/lawn. Non-turf areas are required to be watered via a drip system. No turf/lawn is allowed on slopes greater than 50% (2:1 grade). Decorative pools/ponds/or streams are discouraged and are limited to no more than 5% of a lot.~~
2. ~~Required landscaping shall be installed within 24 months of the date of receiving an occupancy permit for the property.~~
3. ~~A minimum of 50% of the front and street side yards shall be covered with planted vegetation at the time of maturity.~~

18.76.040 Maintenance

Required landscaped areas shall be maintained in a neat, clean, orderly and healthful condition. This is meant to include proper pruning, mowing lawns, weeding, removal of litter, fertilizing and replacement of dead plants and the regular watering of all plantings to assure their continued viability.

18.76.050 Screening Requirements

Where landscaped screening is required, said screening shall consist of evergreen shrubs, closely spaced and maintained at substantially the specified height of said required screening. When not otherwise specified, natural screening shall be maintained at a height of from four to six feet.

18.76.060 Multi Family And Non-Residential Development Plot Plan Requirements

Where landscaping is provided for multi-family residential and non-residential developments in this title, a plot plan showing the proposed landscape development, efficient water-wise irrigation system and use of the property shall be submitted to the Planning Director. See Plot Plan application/checklist available online and at the City Offices. The same plot plan used to show parking layout or other requirements for the issuance of a building permit may be used to show landscaping providing all proposed landscaping is detailed adequately on said plot plan. See18.72 Off-Street Parking and Loading. The Planning Director may deny or suggest modifications of such plans if it is determined that they are not consistent with the requirements and purposes of this chapter. All plot plans shall be prepared by a licensed landscape architect, engineer, or certified landscaper installer. All plot plans shall be prepared by a licensed landscape architect, engineer, or certified landscaper installer, designed using water-wise design standards as recommended by local water conservancy districts, The City reserves the right review plans for compliance with this section and all applicable Heber City Ordinances.

18.76.070 Street Tree Planting Requirement

In all zones and locations within Heber City, street trees, with root structures generally not shown to lift/disrupt sidewalks, shall be planted by property owners within the planter strip, or on private property in the front yard 5’ from the right of way line if no planter strips exists, as part of the required landscaping. Street trees shall be planted and spaced in accordance with Chapter 12.20 of Heber City Municipal Code.

18.76.080 Right Of Way Landscaping

Property owners are responsible for maintaining the landscaping within the adjoining right-of-way and/or planter strips in accordance with Chapter 12.20 of Heber City Municipal Code.

18.76.090 Parking In Landscaped Areas

Parking is prohibited upon any required landscaping or any area that is landscaped.

18.78 Lighting

<u>18.78.040 Lighting Standards</u>

A. Non-Residential and Multi-Family Residential Standards

1. All lighting shall be full cut-off and directed downward. The lighting element shall not be visible from the property line. **OK**

2. Height – All fixtures shall be mounted no higher than 16 feet. **NEED TO CLARIFY THE HEIGHT**

3. Light Containment – In no case shall Direct Light be allowed beyond the property line and in no case shall the lighting element be visible from beyond the property line. Site lighting shall be considered as to reduce the amount of Reflective Light leaving the site. **OK**

4. LED Required – All fixtures shall be LED. **OK**

5. Shoebox fixtures are prohibited. All poles and fixtures shall be of a decorative design. **OK**

6. All lighting fixtures shall be 3000 K or less in color. **5,000k IS TOO HIGH**

7. In no case shall the total lumens for a single site exceed 100,000 lumens per net acre. **OK @ 6,112.47 LUMENS PER ACRE**

8. All non-residential exterior lighting shall be shut off during non-business hours. **WILL LIGHTING BE SHUT OFF DURING NON-BUSINESS HOURS?**

a. Some lights may be dimmed when connected to an automated dimmer as determined on a case by case basis by the Planning Commission when:

i. The lighting is essential to the security of the site.

ii. The site offers services outside of employed business hours.

b. Dimmed lights must be dimmed by a minimum of 50%. This may be accomplished by dimming all lights by 50% or by a combination of dimmed and shut off lights. In no case can any lights be running at 100% output. c. Motion sensor security lights may operate during non-business hours.

9. Businesses that operate 24 hours a day and are adjacent to residential property shall dim exterior lighting so as to reduce the impact to surrounding residential properties while maintaining site security for the patrons of the said business. **OK/NA**

~~B. Single Family Residential Standards. The following provisions shall be applicable to all residential developments and buildings approved after the date of adoption of this ordinance.~~

~~1. All lighting shall be full cut-off and directed downward. The lighting element shall not be visible from the property line.~~

~~2. Height – All fixtures shall be mounted no higher than 16 feet.~~

~~3. LED Required – All fixtures shall be LED.~~

~~4. All lighting fixtures shall be 3000 K or less in color.~~

~~5. Home Owners Associations (HOA's) in new residential subdivisions shall include dark sky compliant regulations in their Covenants Conditions and Regulations (CC&R's).~~

C. Exemptions

1. Airport Lighting: Lighting at the Heber City Municipal Airport.

2. Flags: The up lighting of National, State, or Local Government flags, by any party, shall be exempt. Flags should be taken down at night to avoid the need for lighting.

3. Holiday Lighting: Holiday lighting shall be exempt.

18.78.050 Lighting Plan Required **OK/REQUIREMENTS MET**

Lighting Plans are required for all Non-Residential and Multi-Family Residential Developments and shall be submitted as part of the Site Plan.

A. Lighting plans shall include the following:

1. Detail for lighting fixtures. Including:

a. Fixture type

b. Fixture dimensions.

c. Fixture color.

d. Lighting element type.

e. Lighting element wattage.

f. Lighting color temperature in Kelvin units.

g. Fixture Lumens output

2. Photometric plan of site.

3. Fixture locations. Including:

a. Exterior building lighting.

b. Site lighting.

c. Right of way lighting.

B. Continuing obligation to comply with standards. Once new lighting is installed, the owner has the continuing obligation to ensure existing and new lighting fixtures comply with city lighting standards.

18.78.060 Right Of Way Lighting
All lighting within the public right of way shall be consistent with the current Engineering Standards and Specifications.

18.78.070 Conflicting Provisions
In any instance where the provisions of this section conflict with the provisions of another section, the stricter of the two provisions shall apply.

18.78.070 Conflicting Provisions
In any instance where the provisions of this section conflict with the provisions of another section, **the stricter of the two provisions shall apply.**

18.117 Subdivisions
18.117.010 General Provisions
A. Title of Provisions. This title shall be entitled the "The Heber City Subdivision Ordinance" and may be so cited and pleaded.

B. Purpose and Intent. The purposes of this title shall be to:

1. Promote the health, safety, convenience, and general welfare of the present and future inhabitants of the City; 2. Facilitate the transfer of land having accurate legal descriptions; 3. Bring about the development of a more attractive environment within and about the City; 4. Establish the rights, duties, and responsibilities of subdividers with respect to land subdivision; 5. Facilitate the implementation of the general plan.

C. It is declared to be the public policy that these subdivision regulations shall be promulgated for the purpose of facilitating the platting of land and the construction and sale of buildings.

18.117.012 Recording
A. Procedures. No person shall subdivide any tract of land which is located wholly or in part within the City, nor shall any person sell, exchange, or offer for sale, or purchase, or offer to purchase any parcel of land which is any part of a subdivision of a larger tract of land within the above described territory, nor shall any person offer for recording any deed conveying a parcel of land or any interest therein, unless the subdivider has first produced and submitted an executed plat thereof, which plat must be approved by the Planning Director and City Engineer, and recorded in the office of the County Recorder before such sale or exchange or purchase is affected. Approval of the final plat shall be obtained by complying with all of the requirements of this Chapter including the applicable application/checklist, and the Standard Specifications and Drawings. All small lot subdivisions and lot splits shall require the formal consent of the Planning Director or designee.

18.117.014 Requirement Of Adequate Public Facilities
A. Adequate Public Facilities Required. Adequate public facilities required to be available concurrent with subdivision approval. From and after the effective date of this Amendment to the Heber City Subdivision Ordinance, no application for subdivision approval shall be granted, approved or issued unless the applicant has provided sufficient information to establish that

adequate public facilities in the area affected by the proposed development will have sufficient capacity available at the adopted level of service standards to accommodate the proposed development within a reasonable period of time following the issuance of final subdivision plat approval for the proposed development. B. Essential Public Facilities. Essential public facilities to which this requirement will apply include the following:

1. Drinking water system, including quantity, quality, treatment, storage capacity, and transmission/distribution system capacity;

2. Sanitary sewer and wastewater system, including outfall lines, laterals and collector lines;

3. Storm water drainage, including flood control facilities;

4. Street system, including streets, roads, highways, intersections and related transportation facilities;

5. Recreational facilities, including parks and trails.

6. Pressurized irrigation system, including quantity, quality, storage capacity, and transmission/distribution system capacity.

7. Broadband access

C. Procedures. As part of the material submitted in support of an application for subdivision approval, the applicant shall submit sufficient information in order to demonstrate that adequate public facilities will be available at specified levels of service within a reasonable period of time following the issuance of subdivision plat approval for the proposed development. Such a determination may include the timing, phasing and sequencing of the proposed development. The City Engineer, the Planning Director, and the Planning Commission, may request additional information from the applicant to address the adequacy and availability of the public facilities referenced above as part of the subdivision approval process. Processing of applications shall follow the requirements of Section 18.117.040.

D. Level of Service Standards. Compliance with level of service standards shall be measured in accordance with the adopted level of service standards as set forth in the latest revision of the Heber City Impact Fee Facilities Plan and in the adopted Heber City Standard Specifications and Drawings as they may, from time to time, be amended.

E. Adequate Public Facilities Not Available. If it is determined that adequate public facilities will not be available at specified levels of service within a reasonable period of time following the issuance of final subdivision plat approval, so as to assure that such services will be available at the time of occupancy of new development being proposed, the Planning Commission, under advisement by the City Engineer, shall review, evaluate and discuss with the applicant, the following alternatives and conditions in the order presented:

1. Allow the developer to voluntarily advance the costs necessary to provide those public facilities which are necessary to service the proposed development and meet the applicable level of service standards by entering into an appropriate form of

development agreement, which may include reimbursement of any expenses incurred above and beyond those reasonably necessary for or related to the need created by or benefit conferred upon the proposed development. 2. Require timing, sequencing and phasing of the proposed development consistent with the available capacity of public facilities; 3. Defer final plat approval and the issuance of building permits until all necessary public facilities are adequate and available; or, 4. Deny subdivision plat approval at the present time, and require the applicant to reapply when adequate public facilities are available at adopted level of service standards.

18.117.016 General Subdivision Procedures

Required Procedures For Approval. The following steps or procedures must be followed in order to obtain approval of a subdivision:

A. Application Submittal Deadline. All complete applications for a preliminary plat shall be made at least 16 (sixteen) calendar days before the next regular Development Review (DRM) meeting. All applications shall follow the engineering and planning checklists for the required content for submittal. Applications shall not be forwarded for review as a preliminary plat until such applications are deemed complete by the Planning Director or designee and the City Engineer. Once deemed complete, the City shall provide corrective comments within 15 working days for regular residential subdivisions.

B. Preliminary Plat Submission. Applicant prepares preliminary plat documents and submits electronic copies in PDF format, makes application, and pays fees prior to application submittal deadline. Planning Staff shall deliver the copies to each Planning Commission member, engineering, public works, applicable utility agencies, school district, City fire official, postal service, police chief, City Manager, building official, UDOT (if applicable), and affected entities as required by Utah State Code .

C. Staff Review. Staff will review the application and provide a written review to the applicant following the DRM meeting. Staff shall consider the following items in their review:

1. Relationship of the proposal to the General Plan;
2. Zoning of the proposed development and general requirements of the zone;
3. Third-party utility considerations;
4. Roads, blocks, and general transportation;
5. Flood zones, sensitive lands, and potential flood hazards;
6. Drinking water requirements;
7. Pressurized irrigation requirements;
8. Sanitary sewer requirements;
9. Storm water system requirements;
10. Park and Trail requirements;

11. Capital improvement plans;

12. Other items as required in the subdivision application, available online and at the City offices.

D. Outsourcing of Plan Reviews. The City may outsource the review of any application to contracted consultants. Outsourced reviews will follow the provisions of the Staff Review above. All review costs and any required special studies shall be reimbursed by the applicant.

E. Development Review Meeting (DRM). The Development Review (DRM) is an administrative committee and part of the preliminary plat review process, consisting of staff from the City, local utilities, and other organizations as applicable. The role of the DRM is to review development applications for compliance with development standards, coordination between jurisdictions, utilities, and organizations as applicable, and meet with applicants to provide guidance and understanding of the requirements of their application. The DRM is not a Land Use Authority and provides initial guidance on issues and processing concerns for the preliminary plat application. Concept plans (see Engineering checklist and 18.20.010 Concept Plans) for any subdivision which include or are suspected to include Sensitive Lands (see Sensitive Lands Ordinance 18.67) shall also be reviewed during a DRM. Applicants are required to disclose any known Sensitive Lands associated with their project as part of the application process, but Sensitive Lands may also be identified through other means, including review of Geotechnical reports or other studies or reports associated with the project, published Sensitive Lands maps, site visits or similar means. The concept plan review, when required, may include detailing additional reports or studies needed to evaluate and address sensitive lands issues, as part of the preliminary plat review process.

F. Concept Plan Submission. Concept plans are optional for regular residential subdivisions and required for all other types of subdivisions. Applicant prepares Concept Plan, makes application, pays fees, and submits concept plans prior to application submittal deadline. This applies to concept plans for commercial, industrial, multiple-unit residential, and those regular residential subdivisions located on a sensitive land. Applicant shall provide electronic copies of the proposed concept plans in PDF format. Planning Staff shall deliver the copies to each Planning Commission member, engineering, public works, applicable utility agencies, school district, City fire official, postal service, police chief, City Manager, building official, UDOT (if applicable), and affected entities as required by Utah State Code.

G. Preliminary Plat Approval. The Planning Commission reviews the preliminary plat as per items discussed in the review process and for compliance with the ordinances. The Planning Commission is the Land Use Authority for approving the Preliminary Plat. If approval is given at this time, the applicant shall be given a list pertaining to items the City expects on the final plans as per the final plat application checklist. Preliminary approval does not guarantee final subdivision approval. Up to 4 resubmissions according to the process defined in State Code of the preliminary plat plans to comply with the City requirements for the final plat are allowed for regular residential subdivisions. If such revised plans are not provided in compliance with City Standards, the plan shall be denied.

H. Final Plat Submission. Applicant prepares and submits final plat, makes application, and pays fees prior to application submittal deadline. Final plat shall consist of items required at preliminary stage, the final plat application and checklists, the adopted Heber City Standard Specifications and Drawings, and by this ordinance in electronic PDF format.

I. Final Plat Approval. The Planning Director along with the City Engineer, or their designees, are responsible for approving the final Plat. The Planning Director along with the City Engineer, reviews the final plat and approves the final plat if it is complete and if all requirements from preliminary plat approval are met or disapproves it. The final plat shall be in substantial compliance with the plans approved at preliminary stage. Planning Commission approval does not guarantee final subdivision approval. For regular residential subdivisions up to 4 revisions (in accordance with Utah State Code) of the approved preliminary plat shall be allowed in between preliminary and final plat approval. The City shall complete its reviews within 20 working days. Any material departures regarding the rights and obligations of the parties shall require a modified Preliminary approval by Planning Commission.

J. Appeals of engineering/planning decisions. The 2023 new State Law creates two distinct appeal processes after the four review cycles have been exhausted and 20 days have passed.

1. For disputes relating to public improvement or engineering standards, the City shall assemble a three-person panel meeting within 10 days of receiving a request from the applicant. The panel of experts includes:

a. One licensed engineer designated by the municipality. b. One licensed engineer designated by the land use applicant. c. One licensed engineer, agreed upon, and designated by the two designated engineers. Members appointed to the panel may not have an interest in the application in question. The applicant must pay 50% of the total cost of the panel and the municipality's published appeal fee. The City pays the other 50%. The panel's decision is final, unless the City or applicant petition for district court review within 30 days after the final written decision is issued.

2. For all other disputes, the City shall refer the question to the appeal authority at the applicant's request.

K. Recordation of Final Plat. Applicant records plat in office of County Recorder within one (1) year from the date receiving final approval and before selling or conveying any lots within the subdivision. Final plats not recorded within one (1) year from the date receiving Final approval shall be null and void unless physical construction has started or an extension has been requested and granted prior to the original plat expiration date. In cases where construction has started, plat approval shall automatically be extended for a second year from the date of the final approval. If physical construction has not started, applicants may request and be granted a one (1) year extension. Such extensions shall be given if the applicant can show financial delays, and/or material, or labor shortages. Plat extensions are granted by the Planning Director for Final Plats.

18.117.018 Property Line Adjustments And Plat Amendments

A. Lot Line Adjustments. The Planning Director, or its designee, shall serve as the Land Use Authority for approving Lot Line Adjustments, as defined by Utah Code Title 10-9a et seq. with appeals going to the Appeal Authority.

B. Approval criteria for a Lot Line Adjustment. The following approval criteria must be complied with in order to approve a boundary line adjustment.

1. The change in boundary lines does not result in the creation of a new lot or parcel; 2. The proposed change to a lot or parcel does not result in the creation of a parcel of size or shape that does not conform to all City zoning regulations and site development standards. If the proposed change is to a legally existing nonconforming parcel, the change may not increase the nonconformity; 3. The proposed change to a lot or parcel does not result in changing a conforming structure into a nonconforming structure as a result of setbacks, proximity to other structures, use, landscaping, or any other site development requirement; 4. The petition to change the boundaries must include signatures from representatives of each parcel affected by the boundary line adjustment; and 5. In the case of an adjustment of a boundary line adjusting property lines that affect more than 2 lots in a subdivision previously approved by the City, the applicant shall submit a plat, and in the case of an adjustment of a property line between two parcels, the applicant shall submit a record of survey. 6. The boundary line adjustment may not adjust the boundary line between a parcel and an existing public street or right-of-way, or propose a new public street or right-of-way.

C. Plat Amendments. The Planning Director, or its designee, shall serve as the Land Use Authority for approving Plat Amendments. If all adjacent owners provide a written notarized statement that they agree with the lot line adjustment, the plat may be recorded after receiving the Planning Director's signature.

18.117.020 Condominiums

A. Purpose. Utah State Code establishes condominiums as a form of subdivision. Commercial and industrial condominiums are permitted in any zone that permits commercial and industrial uses. Residential condominiums are permitted only in zones that specifically permit residential condominium dwelling units. Conversions of legal and legally non-conforming multi-family dwellings may also be approved as per this ordinance.

B. Approval Required. Prior to the construction or conversion of any building or use as determined as a condominium, a subdivision plat and site plan shall be submitted to and be approved by Heber City in conformance with the procedures, requirements, and standards contained within the Heber City Code and the requirements of the Utah Condominium Ownership Act.

C. Submission of Application. The owner or developer of a proposed condominium project or conversion project shall file an application with the City. Such application shall be accompanied by and be in accordance with the following:

1. The surveyed subdivision plat shall be drawn to scale in accordance with the Heber City subdivision process and current Standard Specifications and Drawings as adopted by the City. Such subdivision plat shall be prepared by a licensed engineer or architect and shall certify the

final condominium plat. 2. The proposed project shall be at a scale no less than 1 inch equals 40 feet and shall designate the location of all buildings present, needed or proposed. Further, it shall display proposed street right of ways, utilities, irrigation ditches, common areas including the location of utility lines and easements, location of storage, parking, driveways, pedestrian ways, curb, gutters, walls, fences and landscaping. 3. The petitioner shall prepare and provide copies of the condominium declaration and bylaws or homeowners organization (HOA). 4. Where conversions of existing buildings are proposed as part of the project, a site and building condition report containing information that compares the existing construction to the International Building Code requirements shall be submitted as part of the application together with a plan of all proposed improvements and repairs.

D. Review by The Planning Commission. After DRM/staff review and application revisions, if needed, the Planning Commission shall review the proposed application, processed as a preliminary plat, and related documents to determine whether the project conforms with all appropriate requirements, Standard Specifications and Drawings of the City and is in conformance with the Utah Condominium Ownership Act.

1. For conversions of existing buildings to condominiums, if the Building Official finds that there are any violations to any of the applicable ordinances, building codes, or similar requirements, the Planning Commission may hold the application for the condominium project until such time that all life/safety violations have been corrected. 2. The proposed project shall be consistent with the International Fire Code and Adopted Building Codes, verified by inspections through the Building Department 3. Depending on the current use parking demand, additional parking needs shall be based on occupancy levels and proposed customer demand, but in no way shall it be less than what is required under the zoning district in which the project is proposed. 4. Site access shall be evaluated and modified to meet the needs of the new proposed use, considering traffic patterns, traffic generations, and the anticipated population of the development. 5. A minimum of 20% of the gross area of the site shall be open space 6. If not already in compliance with the Zoning Ordinance, additional landscaping to assure appropriate buffering and compatibility with adjacent uses, is required. 7. Utility meters shall be installed to the development and/or each condominium unit as specified by the applicable utility. 8. Water meters shall be installed according to City Standard Specifications and Drawings at street rights-of-way. 9. All utilities and utility lines shall be placed within the public right-of-way. However, approved public easements may be permitted if the City Engineer deems them essential for the feasibility of the project. 10. Each unit shall be provided with readily accessible individual shutoff valves, safety devices, or switches for water, gas and electrical services. 11. Prior to recording the final plat, building deficiencies shall be corrected or bonded for.

E. Preliminary and Final Plat Final Approval. Condominium Plats are required by Utah State Code to follow a Preliminary and Final Plat Process. The Planning Commission shall be the Land Use Authority for the Preliminary Plat of a condominium plat. The Planning Director, or designee, shall be the Land Use Authority for Final Plat Approval of a condominium plat. Approval of a condominium project shall remain in effect and only expire pursuant to a new application.

18.117.022 Required Plans

A. Concept Plans required for commercial, manufacturing, Sensitive Lands, and mixed-use subdivision projects only. The Concept Plan submission shall be made using the concept plan application, associated checklists and shall be drawn to a scale no smaller than one inch equals one hundred (100) feet and shall generally include:

1. Conceptual layout drawn to a scale no smaller than one-inch equals one hundred (100) feet with the following:

a. Proposed streets, in relation to the existing and planned streets within one-fourth mile of the subdivision

b. Lots, including lot sizes

c. Building pads for residential projects

d. Buildings for multi-family or nonresidential projects, including building area

e. Parking for nonresidential and multi-family residential projects

f. Open space, as required by the zone

g. Landscaping, as required by the zone

2. Data Table containing the following:

a. Uses

b. Density

c. Open space calculations, as required by the zone

d. Landscaping calculations, as required by the zone

e. Parking analysis

B. Preliminary Plat. The preliminary plat is required to be submitted according to the applications and checklists from Planning and Engineering available online and at the City offices. The Standard Plat, generally includes:

1. The proposed name of the subdivision;

2. Vicinity map-the location of the subdivision. Where the plan submitted covers only a part of the subdivider's tract, the Land Use Authority may require the subdivider to prepare a preliminary plan covering all of the subdivider's tract before even considering a preliminary plan covering only part of the tract;

3. The names and addresses of the subdivider, the engineer, or surveyor of the subdivision, and the owner(s) of the land immediately adjoining the land to be subdivided;

4. Information sufficient to locate accurately the property shown on the plan with reference to survey markers or monuments;

5. Contour map at intervals required by the Land Use Authority at concept approval;

6. The boundary lines of the tract to be subdivided;

7. The location, width, and other dimensions of all existing or platted streets and other important features such as watercourses, exceptional topography and buildings within the tract and within two hundred feet of the tract to be subdivided;

8. Existing sanitary sewers, storm drains, drinking and pressurized irrigation, water supply mains, and bridges within the tract or within two hundred feet thereof;

9. The location, width, and other dimensions of proposed streets, alleys, easements, parks and other open spaces with proper labeling of spaces to be dedicated to the public or to the occupants or owners of lots within the subdivision;

10. Northpoint, scale and date;

11. Statements regarding the anticipated density and number of dwelling units to be constructed on each lot.

12. All easements of record shall be shown on the preliminary map; Statements regarding the anticipated density and number of dwelling units to be constructed on each lot.

13. All lot numbers and bearings, distances, and curve data of all lot lines, street center lines, right-of-way lines, etc.

14. A subdivision application may be processed concurrently with a rezone application but no subdivision preliminary plat shall be approved as final until such rezone process is complete. In addition, if a rezone is part of this application, the following shall be included with the preliminary plans:

a. A development agreement that addresses, as a minimum:

1) The dedication and maintenance of public and private open space, natural features, trails, amenities, streets and other common areas.

2) Measures necessary to mitigate land hazards and sensitive lands as required by this Title.

3) Other measures as recommended by the Planning Commission and decided upon by the City Council as part of the rezone process.

4) Implementation of the development's affordable housing plan.

b. A title report for all lands proposed to be subdivided;

c. If sensitive lands are identified on the site, a mitigation design and request for density transfers within the site, as per Chapter 18.67.

d. A Geotechnical Report, as required by the adopted Heber City Standard Specifications and Drawings.

15. A Storm Water Drainage Report meeting the requirements of the Storm Water Design Manual.

16. Water Action Report as required by Section 15.16.090. 17. "Will Serve" letters from all serving utilities.

C. Final Construction - Plans and Final Plat. An application online and at the City offices details the list of all application requirements. In general, the Standard final plat shall be drawn to a scale no smaller than one inch equals one hundred (100) feet and shall generally show:

Final Construction – Plans and Final Plat	
Complies?	**Requirements**
OK	1. The name of the subdivision;
engineering	2. Blocks for the names and stamps of the engineer and/or surveyor of the subdivision. An Owner's dedication block.
engineering	3. Signature lines for the City Engineer, Land Use Authority and Water and Sewer Service Providers.
OK	4. A boundary description. Also, all existing survey monuments and survey monuments to be installed with the construction of the subdivision shall be shown and properly labelled and referenced;
OK	5. Northpoint, scale and date;
OK	6. All easements of record shall be shown on the final plat;
OK	7. Street numbers and names;
OK	8. All lot numbers and situs addresses. Also, all bearings, distances, and curve data for all lot lines street center lines, right-of-way lines, etc.
	9. All public utility easements, as required by the City Engineer;
OK	10. A vicinity map showing the location of the subdivision in relationship to the City;
NA	11. Any notices to purchasers, if required during the review process;
engineering	12. Any notes required by the City Engineer
city	13. The final plat shall be sealed by the Licensed Land Surveyor of record ON THE FIRST SUBMITTAL.
	14. The Final Plans shall be drawn to a scale no smaller than one inch equals one hundred (100) feet for overall sheets and one inch equals forty (40) feet for plan and profile sheets. Final Plans shall be sealed by the Engineer of Record ON THE FIRST SUBMITTAL. In addition to all of the requirements of the preliminary plans, the final plat checklists, the following shall generally also be included with the final plans;
OK	a. An updated title report for all lands proposed to be subdivided;
OK	b. Tax clearance from county assessor;
OK	c. Hard copy and electronic sets of Engineered construction drawings
OK	d. Inclusion of all items discussed and requiring corrections at preliminary approval.

18.177.024 Street Design Standards

A. Widths. Arterial and collector streets shall conform to the widths as described in the Master Transportation Plan and the Heber City Standard Specifications and Drawings. Residential roads with maximum speed limits of 25 mph shall generally not be required to have pavement widths greater than 32' exclusive of curb and gutter. Shorter widths are allowed and streets designated as bike lanes, can be wider (see State Law for exceptions.

B. Cul-De-Sacs. A publicly dedicated Cul-de-sac shall follow the diagrams in the Standard Specifications and Drawings. Private cul-de-sacs are subject to approval of the Fire Marshall. For major subdivisions, cul-de-sacs shall only be approved as permitted by the Planning Commission.

C. Easements. For residential subdivisions, public utility easements, of not less than ten feet in width, are required on front lot lines. Public utility and/or drainage easements, of not less than ten feet, are required on side lot lines and on rear lot lines where needed, when requested by public utility companies, or as otherwise required or approved by the City Engineer. City utilities shall normally be placed in City rights-of-way. When approved by the City Engineer, City utilities may be placed beneath private streets, private parking areas or in other common open space in an exclusive City utility easement of not less than 20 feet in width. Easements shall be provided to the City using the City's standard utility easement language in use at the time such easements are provided. Easements for commercial or industrial development shall generally follow the same requirements.

D. Names. New street names shall not duplicate those names already existing. A street obviously a continuation of another already in existence shall bear the same name. All streets shall be designated by number if straight and running North and South or East and West. Such streets may also be designated by name. All other streets shall be named. All street designations shall be reviewed by the City and submitted to Wasatch County for final review. Number and name (if named) shall be signed and said signing shall conform to the adopted Heber City Standard Specifications and Drawings.

E. Dedications. All streets, except private streets, shall be dedicated for public use. The dedication of half streets in any subdivision is prohibited except park strip and sidewalk may be omitted on the opposite sides of the streets on the borders of the subdivision when approved.

F. Relations to Adjoining Street System. The arrangement of streets in new subdivisions shall make provision for the continuation of the existing streets to connect with adjoining areas for their proper protection (where adjoining land is not subdivided) at the same or greater width (but in no case less than the required minimum width) unless street cross sections have changed as per the Heber City Standard Specifications and Drawings, proposed street connections shall be extended by dedication to the boundary of such property.

G. Cuts in Pavement. No cuts shall be made in street pavement for at least two years after hard surfacing without City approval by the City Engineer. Curbs and gutters, sidewalks, and the treatment of drainage courses shall comply with the Heber City Standard Specifications and Drawings as adopted by the City. All road cuts shall be in accordance with the Heber City Standard Specifications and Drawings.

H. Street Plan Approval. A subdivision will not be approved if it conflicts with the Master Transportation Plan. A subdivision shall not be platted over any strip of land which is shown as a future street on the Master Transportation Plan as an existing or potential local, collector or arterial street.

18.177.026 Block Design Standards

A. Length. The maximum length of blocks shall be eight hundred feet and the minimum length of blocks shall be four hundred feet, except as specified in the North Village Overlay Zone. The Planning Commission on recommendation of the City Engineer, may approve a modification to this requirement if deemed reasonable when the natural contour of the land makes this requirement unsafe or not practical.

B. Width. The width of blocks shall be sufficient to allow two tiers of lots. The Planning Commission on recommendation of the City Engineer may approve a modification to this requirement if deemed necessary when the natural contour of the land makes this requirement unsafe or not practical or when a subdivision backs onto an arterial or major collector road.

18.177.028 Lot Design Standards

A. Building Sites. The lot arrangement, design and shape shall be such that lots will provide a suitable area of land for buildings and be properly related to topography and conform to requirements set forth in this title. Lots shall not contain peculiarly shaped elongations, solely to provide necessary square footage, which would be unusable for normal purposes.

B. Lot Sizes. All lots shown on the subdivision plat must conform to the minimum requirements of Title 18 of this code for the zone in which the subdivision is located.

C. Lots Must Abut On Public Streets. Each lot shall abut on a street dedicated by the subdivision plat or an existing publicly dedicated street except when private streets are approved by the Planning Commission. Flag lots are exempt from this requirement.

D. Corner Lots. Corner lots in single family zones shall be 10% larger than the minimum lot size required by the zone.

E. Parts of Lots. All remnants of lots below minimum size, left over after subdividing a larger tract, must be attached to adjacent lots, rather than be allowed to remain as parcels that may be non-conforming or inherently unusable.

F. Divided Lots. Where the land contained within one lot is divided into two or more parcels in separate ownership, the land in each lot so divided shall be transferred by deed to single ownership before approval of the final plat, and such transfer recorded in the county recorder's office before being certified to the Planning Department by the subdivider.

18.117.030 Improvements

A. Requirements. The following improvements, designed according to the adopted Heber City Standard Specifications and Drawings, shall be installed in all subdivisions. The improvements shall include:

1. Drinking Water, Pressurized Irrigation, Sewer, Storm Drain, Solid Waste:

a. A potable water supply in amounts and manner as required under Section 17.28.030 of this chapter in accordance with the State Board of Health Standards; b. The installation of Drinking Water mains and Drinking Water laterals to each lot property line c. Sewer mains, and sewer laterals to each lot property line; d. Fire hydrants and locations as directed by the Fire Marshal e. Solid waste disposal facilities f. Storm drain system g. Pressurized irrigation system.

B. Streets:

1. The grading and graveling of all streets and the installation of all required culverts 2. The hard-surfacing of all streets. 3. Curbs and gutters and sidewalks.

C. Public Utilities. Electric, cable/internet natural gas, and telephone lines shall be installed. These utilities shall be located underground, except when major transmission lines are on site and when other adjacent property owners would be impacted.

D. Survey Monuments.

E. Sensitive lands and environmental hazards shall be addressed as per Chapter 18.67.

F. Street lighting.

18.117.032 Platting Requirements

A. Preparation. A final plat shall be prepared for all subdivisions.

B. Material. The plat shall be drawn, as per the Standard Plat requirements, on mylar material and shall conform to City standards. In addition, an electronic GIS Final Plat and plans submittal is required. Details and workmanship shall be neat, clean, and legible.

18.117.034 General Subdivision Requirements

A. Public Spaces. In subdividing property, consideration should be given to sites for schools, parks, playgrounds, and other areas for public use, as shown on the General Plan and the Parks and Trails Master Plan. Any provision for such open spaces shall be indicated on the preliminary plat in order that it may be determined in what manner such areas will be dedicated to or acquired by the appropriate agency.

B. Private Roads and Driveways -- Construction and Maintenance. The City shall not open, grade, pave, or perform any maintenance work on any private or undedicated street or alley, and the City shall refrain from laying utility lines in any street which has not:

1. Been accepted by the City as a public street or alley; or 2. Which has not received the approval of the City of a subdivision, unless an easement is granted therefor. The City shall not accept nor maintain a street or other public way unless said street has been accepted by the City as a public street and the street has been constructed in accordance with City standards.

C. Water Supply and Storage. All lots within the subdivision shall be served by an approved central water system consisting of both a drinking water system and a pressurized irrigation system that meets the adopted Heber City Standard Specifications and Drawings. The subdivider shall submit proof that the proposed drinking water source and distribution system meet Level of Service Standards as per the most recent Master Plan and/or the Impact Fee Facilities Plan (IFFP) for indoor uses plus the amount of water required to provide fire

protection as per City standards. Where water is to be used for lawn sprinkling and other outside uses, the subdivider shall submit proof the proposed pressurized irrigation water source and distribution are capable of providing irrigation water according to State Standards and City requirements.

D. Small Subdivisions. Whenever a small subdivision with ten or less lots, meeting the conditions as set forth in this chapter is proposed, a preliminary plat conforming to the requirements for preliminary plats as set forth in this Chapter, shall be prepared and submitted for approval. Before preparing and submitting the plans, the applicant is encouraged to meet with the Planning and Engineering departments to determine if any of the requirements set forth in the application and checklists are not necessary. Staff will base its determination on the site conditions as well as surrounding conditions.

1. Before the Planning Director shall approve any such small subdivision, all improvements required under Section 18.117.30 shall have been installed or assurances given to the City that the improvements will be installed without cost to the City as set forth in Chapter 18.52. Exception: The applicant may petition the Planning and Engineering Departments to delay the installation of curb, gutter, and sidewalk in areas where such improvements are lacking and distant. If approved, the eventual installation shall be assured by a formal delay agreement, recorded at the County or a recorded deed restriction. 2. The Planning Director, or its designee, serves as the Land Use Authority approving Small Subdivisions with appeals going to the Appeal Authority.

E. Work to Be Done By Engineer or Surveyor. All engineering work or surveying of property must be done by or under direction of a Utah licensed professional engineer or professional land surveyor registered in the state.

18.117.036 Improvement Completion Assurance

A. Option to Provide Improvement Completion Assurance. In accordance with Utah Code § 10-9a-604.5, before an applicant conducts any development activity or records a plat, the applicant shall: (i) complete any required public landscaping improvements or infrastructure improvements; or (ii) post an improvement completion assurance for any required public landscaping improvements or infrastructure improvements. The improvement completion assurance shall be in the form provided for in the Heber City Standard Specifications and Drawings, or such other form as approved by the City Engineer and City Attorney.

B. Warranty of Infrastructure Improvements. Prior to the City accepting a public landscaping improvement or infrastructure improvement, the applicant shall: (a) execute an improvement warranty for the improvement warranty period; and (b) post security in the form provided for in the Heber City Standard Specifications and Drawings in the amount of up to 10% of the lesser of the: (i) municipal engineer's original estimated cost of completion; or (ii) applicant's reasonable proven cost of completion. The improvement warranty period shall run for one year from the date the City completes a requested inspection of the infrastructure improvements and accepts the improvements into warranty. Upon acceptance of the improvements into warranty, any remaining improvement completion assurance in excess of the improvement warranty amount will be released. If the City is unable to complete inspections due to snow,

ongoing construction, lack of access, or other conditions, the improvement warranty period will not begin to run until conditions allow for inspection and acceptance of the improvements.

C. Final Inspection and Release. At the end of the improvement warranty period, the developer may request a final inspection and release of the improvement warranty. The City Engineer or designee shall make a final inspection of the improvements. If all liens are paid, and other conditions thereof are found to be satisfactory, the City Engineer shall release the improvement warranty.

18.117.038 Costs And Charges

A. Required improvements and processing costs and charges. See the Adopted Heber City Fee schedule for costs. Charges in connection with the planning, processing, and development of subdivisions in the City shall be shared between the subdivider and the City according to the following schedule. Where infrastructure installation requires significant system-wide oversized improvements beyond those necessitated by the development, reimbursement agreements shall be considered as per State Law.

Plan or Facility	Subdivider	City
Concept Plan for Sensitive Lands and non-residential projects	100%	0%
Preliminary Plan	100%	0%
Final Plat Plans	100%	0%
Easements and rights-of-way, on-site and off-site	100%	0%
Grading and draining streets on-site	100%	0%
Grading and draining streets off-site	Special negotiations with City Council	

Plan or Facility	Subdivider	City
Bridges and culverts	100%	0%
Street paving on-site	100%	0%
Street paving off-site	Special negotiations with City Council	
Curb and gutter and curb cuts	100%	0%
Sidewalks	100%	0%
Street signs	100%	0%
Water Storage	0% if existing tanks can serve development; Special negotiations with the City Council if not	
Water Supply	100%	0%
Water shared to supply the amount of water required in Section 17.48.030	100%	0%
Water mains and laterals up to and including 10" diameter	100%	0%
Sewer mains and laterals up to and including 10" diameter	100%	0%
Oversize Water and sewer mains	Special negotiation with the City Council	
Street lighting maintenance and electricity expenses	0%	100%
Electric utilities	100%	0%
Parks	100%	0%
Monuments	100%	0%
Canal and flood channel protection	Special negotiations with the City Council	
Elimination of environmental hazards	100%	0%

18.117.040 Amendments

Before approving a preliminary plat for development greater than 10 lots of a subdivision, the Planning Commission may require amendments or modification of the plan if it finds that: A. The layout of the subdivision does not conform to the required standards of design as set forth in this title and in the adopted Heber City Standard Specifications and Drawings;

B. The subdivision is not provided with adequate ingress or egress;

C. The subdivision design contains sensitive lands such as geologic, soil, water, or other hazards which could be detrimental to the subdivision, surrounding area, or to the City, and which are not adequately addressed in the application;

D. The subdivision does not provide the required improvements or quality of improvements or does not comply with other requirements as set forth in this chapter and in the adopted Heber City Standard Specifications and Drawings. Such amendments or modifications shall be sufficient in all cases to correct the inadequacies so that the subdivision will conform to the requirements of this chapter and the adopted Heber City Standard Specifications and Drawings.

18.117.042 Substantial Completion Of Subdivisions
Building permits and approvals for occupancy will only be issued pursuant to the provisions of Sections 15.04.040 and 15.04.050 and as required by the adopted Heber City Standard.

C-2 DESIGN STANDARD REVIEW
Type "B" south of 1200 S

SECTION 307 – BUILDING WIDTH:
VERIFY THAT THE EAST ELEVATION MEEDS MODULATION REQUIRMENT

June 26, 2024

Thomas Brennan
EDA
9 Exchange Place, St 1100
Salt Lake City, UT 84111

SUBJECT: Commercial Civil Construction Drawing Acknowledgement
Wasatch County Courts Expansion

Mr. Brennan,

Please find the attached signed civil drawings for the Wasatch County Courts Expansion Project. You will need to coordinate with the Planning Department regarding any other requirements needed for final Planning approval. When all requirements have been met, they will send you a final Planning Approval Letter. Once you receive this letter, you can submit for Building Permit, but in order to avoid delays, please use this signed set of civil drawings with your building permit submittal.

While your building permit is being processed, you can work on the other construction related items the City requires for this type of development.

You will be required to submit the **water rights / shares** needed for your project before construction begins. We will calculate the amount needed after you submit your building permit application.

We will also need a finalized **Performance Agreement** prior to beginning construction. To prepare the Performance Agreement, we will need an **Engineers Estimate** for all public improvments and private storm water improvements assoicated with your project sent to us as soon as possible. Required **bond(s)**, as outlined in the Performance Agreement, can either be a check or Letter of Credit from your bank. If you will be doing a Letter of Credit, we have a standard form for you to use.

In addition, we will need an initial **Inspection Deposit** in an amount to be specified in the Performance Agreement. This will need to be paid by check to Heber City. If additional inspection fees are needed, another deposit will be requested.

After the above requirements are met, but prior to beginning construction, you will need to **schedule a Preconstruction Meeting** with the Engineering Department. You can schedule this meeting by contacting Willa Motley at Horrocks Engineering: 435-654-2226. Following the meeting if everything is in order you will be issued a Notice To Proceed (NTP) authorizing you to begin construction.

We will also need a signed Wasatch County Weed Control Plan submitted prior to issuing a NTP.

Let me know if you have any questions.
Please let us know if you have any questions.

Respectfully,

Russell Funk

Russell Funk, P.E.
Heber City Engineer

HEBER CITY
EST 1889
PLANNING

PLANNING COMISSION

Wasatch County Courts Expansion

Site Plan and CUP

July 9, 2024

Project Details

Location: 1364 US-40

Description: This project is an expansion of the County and State Courts wing at the Wasatch County Justice Center

General Plan Designation: ST Southtown

Zoning: Current Zoning is C-2*

Acres: Total lot area is 16.22 acres with an existing building footprint of 45,690 sq ft and a proposed courts expansion of 19,885 sq ft for a total of 65,575 sq ft.

Current Use: Existing Courthouse

Adjacent Uses: Primarily Commercial/Heber Valley Hospital to the east

*Note that the applicant has applied for a zoning map amendment to change the zoning to the Institutional and Public Facilities Zone. Upon review, the application generally meets both C-2 and IPF zone requirements.

HEBER CITY PLANNING

Vicinity Map and Context

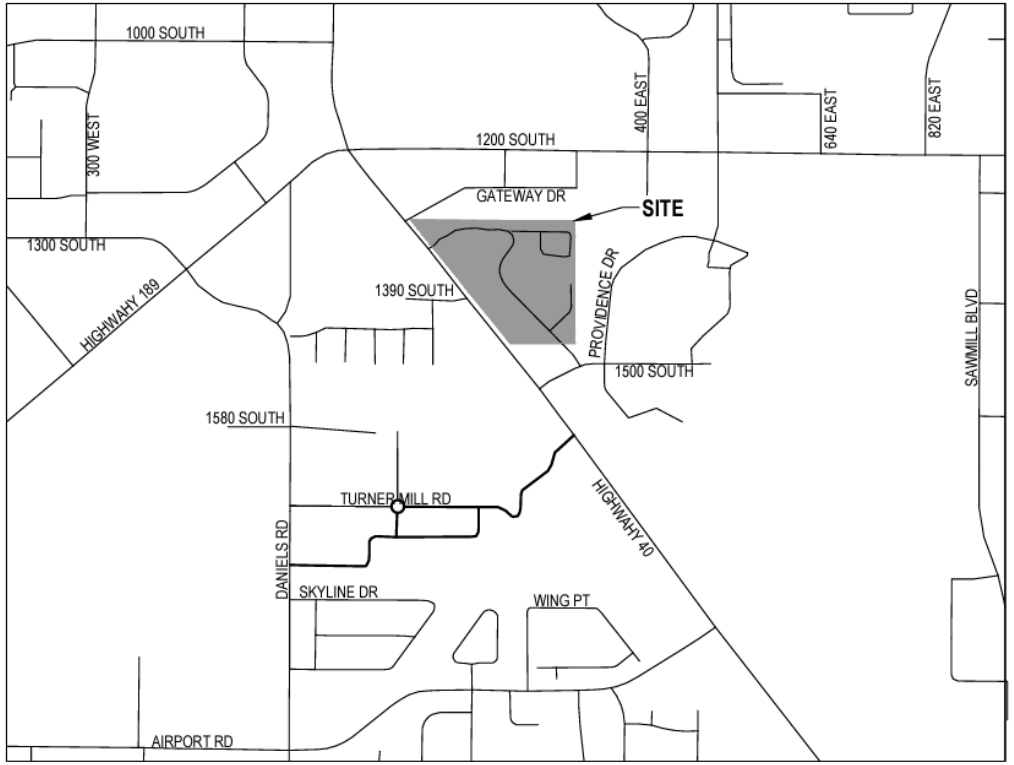

VICINITY MAP
(NOT TO SCALE)

Background:

The Site Plan application was reviewed during the April 17, 2024 DRM at white time staff requested corrections and clarifications to comply with zoning and design standards including:

- **Landscape Standards** – verified that irrigation controls meet standard
- **Lighting Specifications** – 3000 K fixtures, fixture height of 16 feet, clarified that fixtures will have high/low motion sensors and shall remain on to maintain site security
- **C-2 Design Guidelines** – black fluted poles, east façade modified to meet modulation requirement
- **Engineering** – final drainage report, traffic impact study, geotechnical report

Background:

- A Conditional Use Permit (CUP) is required to meet C-2 zoning requirements based on the parcel and building footprint size.
  - 18.28.040: Any use on a parcel larger than 5 acres and any use with a building footprint larger than 60,000 square feet in the C-2 zone shall become a conditional use (16.22 acres and 65,575 sq ft)

Background:

- Engineering has provided a letter outlining the steps needed to move into the construction process including coordination with the Planning Department, submission of water rights/shares, a finalized Performance Agreement, and an Engineers Estimate for necessary improvements. It also outlines requirements for bond(s), an Inspection Deposit, and a Preconstruction Meeting before construction can begin, as well as the submission of a signed Wasatch County Weed Control Plan.

BENCHMARK

NORTHWEST CORNER OF SECTION 6, TOWNSHIP 4 SOUTH, RANGE 5 EAST, SALT LAKE BASE AND MERIDIAN (FOUND BRASS CAP)

ELEV = 5906.37'

811 Know what's below. Call before you dig.

CALL BLUESTAKES @811 AT LEAST 48 HOURS PRIOR TO THE COMMENCEMENT OF ANY CONSTRUCTION

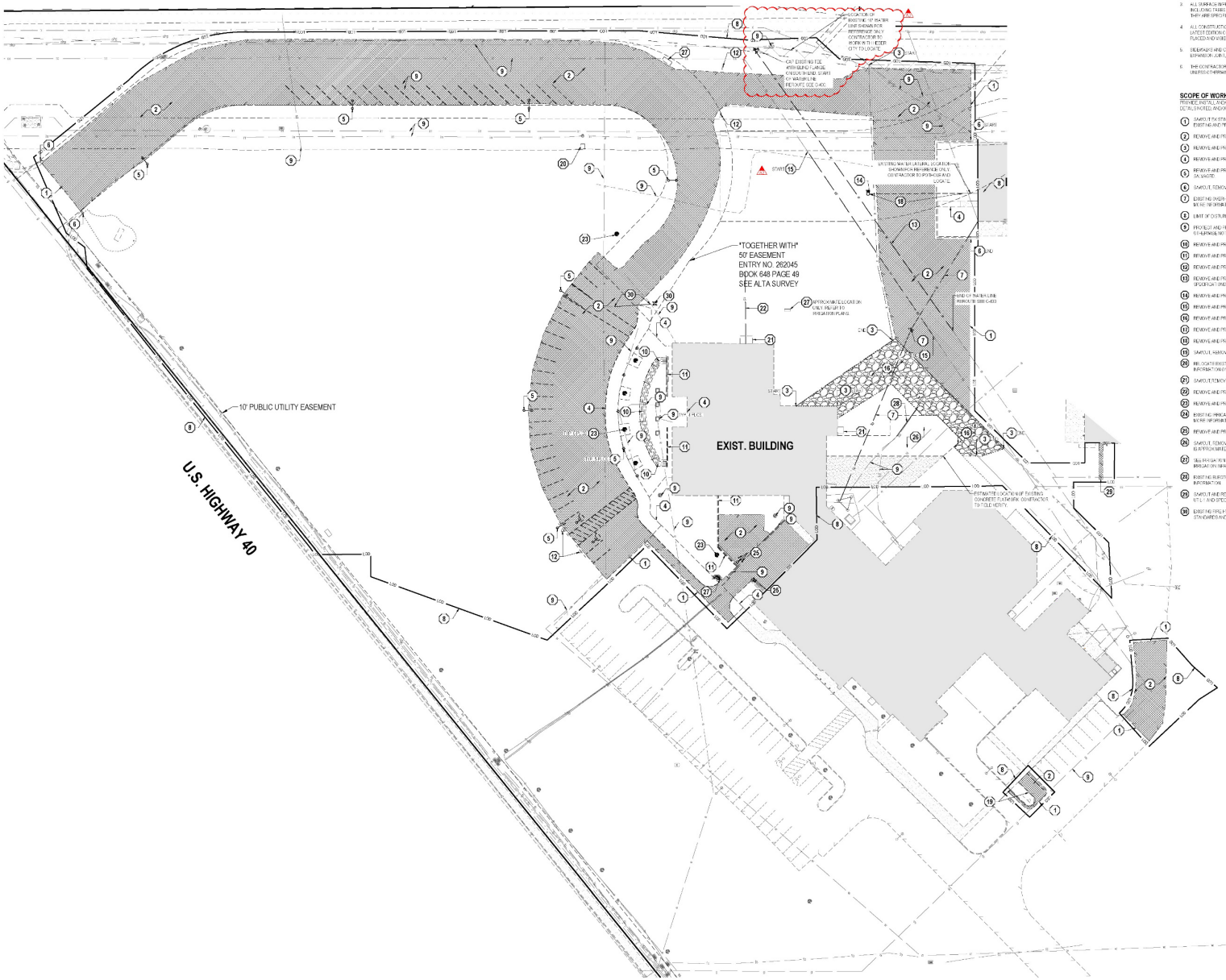

GENERAL NOTES

1. ALL WORK TO COMPLY WITH THE HEBER CITY'S STANDARDS AND SPECIFICATIONS.
2. EXISTING UNDERGROUND UTILITIES AND IMPROVEMENTS ARE SHOWN IN THEIR APPROXIMATE LOCATIONS BASED UPON RECORD INFORMATION AVAILABLE AT THE TIME OF PREPARATION OF THESE PLANS. LOCATIONS MAY NOT HAVE BEEN VERIFIED IN THE FIELD AND NO GUARANTEE GIVEN AS TO THE ACCURACY OR COMPLETENESS OF THE INFORMATION SHOWN. IT SHALL BE THE RESPONSIBILITY OF THE CONTRACTOR TO DETERMINE THE EXISTENCE AND LOCATION OF THE UTILITIES SHOWN ON THESE PLANS OR INDICATED IN THE FIELD BY LOCATING SERVICES. ANY ADDITIONAL COSTS INCURRED AS A RESULT OF THE CONTRACTOR'S FAILURE TO VERIFY THE LOCATIONS OF EXISTING UTILITIES PRIOR TO THE BEGINNING OF CONSTRUCTION THEREWITH SHALL BE BORNE BY THE CONTRACTOR AND ASSUMED INCLUDED IN THE CONTRACT. THE CONTRACTOR IS TO VERIFY ALL CONNECTIONS TO THE EXISTING UTILITIES. THE CONTRACTOR IS RESPONSIBLE FOR ANY DAMAGE CAUSED TO THE EXISTING UTILITIES AND UTILITY STRUCTURES THAT ARE TO REMAIN. IF CONFLICTS WITH EXISTING UTILITIES OCCUR, THE CONTRACTOR SHALL NOTIFY THE ENGINEER PRIOR TO CONSTRUCTION TO DETERMINE IF ANY FIELD ADJUSTMENTS SHOULD BE MADE.
3. ALL SURFACE IMPROVEMENTS DISTURBED BY CONSTRUCTION SHALL BE RESTORED OR REPLACED, INCLUDING TREES AND DECORATIVE SHRUBS, SOD, FENCES, WALLS AND STRUCTURES, WHETHER OR NOT THEY ARE SPECIFICALLY SHOWN ON THE CONTRACT DOCUMENTS.
4. ALL CONSTRUCTION SIGNAGE, BARRICADES, TRAFFIC CONTROL DEVICES, ETC. SHALL CONFORM TO THE LATEST EDITION OF THE MUTCD. THE CONTRACTOR WILL MAINTAIN, FOLLOW AND ENSURE THAT THEY ARE PROPERLY PLACED AND VISIBLE AT ALL TIMES.
5. SIDEWALKS AND CURBS DESIGNATED TO BE DEMOLISHED SHALL BE DEMOLISHED TO THE NEAREST EXPANSION JOINT, MATCHING THESE PLANS AS CLOSELY AS POSSIBLE.
6. THE CONTRACTOR IS TO PROTECT AND PRESERVE ALL EXISTING IMPROVEMENTS, UTILITIES, SIGNS, ETC. UNLESS OTHERWISE NOTED ON THESE PLANS.

SCOPE OF WORK:

PROVIDE, INSTALL AND/OR CONSTRUCT IN FOLLOWING NOTES THE SPECIFICATIONS AND/OR REFERENCED, THE DETAILS, NOTED AND/OR AS SHOWN ON THE CONSTRUCTION DRAWINGS.

1. SAWCUT EXISTING ASPHALT PAVEMENT TO PROVIDE A CLEAN EDGE FOR THE TRANSITION BETWEEN EXISTING AND PROPOSED ASPHALT PAVEMENT.
2. REMOVE AND PROPERLY DISPOSE OF EXISTING ASPHALT PAVEMENT.
3. REMOVE AND PROPERLY DISPOSE OF EXISTING FENCE.
4. REMOVE AND PROPERLY DISPOSE OF EXISTING SIDEWALK.
5. REMOVE AND PROPERLY DISPOSE OF EXISTING LIGHT POLE. CONSULT WITH OWNER IF LIGHT POLE TO BE SALVAGED.
6. SAWCUT, REMOVE, AND PROPERLY DISPOSE EXISTING MOUNTABLE CURB AND GUTTER.
7. EXISTING OVER-CANOPY ELECTRIC LINE AND POLE TO BE REMOVED BY OWNER. SEE ELECTRICAL PLANS FOR MORE INFORMATION.
8. LIMIT OF DISTURBANCE.
9. PROTECT AND PRESERVE ALL EXISTING IMPROVEMENTS, UTILITIES, SIGNS, ETC. (TYPICAL UNLESS OTHERWISE NOTED).
10. REMOVE AND PROPERLY DISPOSE OF EXISTING STAIRS AND HANDRAILS.
11. REMOVE AND PROPERLY DISPOSE OF EXISTING WALL.
12. REMOVE AND PROPERLY DISPOSE OF EXISTING SIGN.
13. REMOVE AND PROPERLY DISPOSE OF EXISTING 12" WATER LINE. CONFIRM WITH HEBER CITY STANDARDS AND SPECIFICATIONS.
14. REMOVE AND PROPERLY DISPOSE OF EXISTING WATER METER.
15. REMOVE AND PROPERLY DISPOSE OF EXISTING IRRIGATION LINE.
16. REMOVE AND PROPERLY DISPOSE OF EXISTING GRATE.
17. REMOVE AND PROPERLY DISPOSE OF EXISTING RAMP AND HANDRAILS.
18. REMOVE AND PROPERLY DISPOSE OF EXISTING WATER LATERAL LINE.
19. SAWCUT, REMOVE AND PROPERLY DISPOSE EXISTING CURB.
20. RELOCATE EXISTING IRRIGATION VALVE. SEE D400 FOR NEW LOCATION. SEE IRRIGATION PLANS FOR MORE INFORMATION ON VALVE.
21. SAWCUT, REMOVE AND PROPERLY DISPOSE OF EXISTING CONCRETE.
22. REMOVE AND PROPERLY DISPOSE OF EXTERIOR ROOF DRAIN LINE.
23. REMOVE AND PROPERLY DISPOSE OF EXISTING TREE, UNLESS OTHERWISE NOTED ON LANDSCAPE PLANS.
24. EXISTING IRRIGATION INFRASTRUCTURE TO BE REMOVED OR RELOCATED. SEE IRRIGATION PLANS FOR MORE INFORMATION.
25. REMOVE AND PROPERLY DISPOSE OF EXISTING AUTOMATED GATE AND BOLLARDS.
26. SAWCUT, REMOVE AND PROPERLY DISPOSE OF EXISTING CONCRETE PAVEMENT. LOCATION OF PAVEMENT IS APPROXIMATE AND EXTENT OF REMOVAL TO BE FIELD VERIFIED BY CONTRACTOR.
27. SEE IRRIGATION PLANS FOR MORE INFORMATION REGARDING REMOVAL OR RELOCATION OF EXISTING IRRIGATION SPRINKLER HEADS.
28. EXISTING ELECTRICAL/TELECOMMUNICATIONS TO BE REMOVED. SEE ELECTRICAL PLANS FOR MORE INFORMATION.
29. SAWCUT AND REMOVE ASPHALT PAVEMENT FOR UTILITY TRENCHING PER HEBER CITY STANDARD DETAIL STD. L AND SPECIFICATIONS.
30. EXISTING FIRE HYDRANT TO BE RELOCATED. REMOVE WATER LINE TO EXTENT SHOWN PER HEBER CITY STANDARDS AND SPECIFICATIONS. SEE C-400 FOR NEW LOCATION.

E D A

[A] The Boston Building
9 Exchange Place, Suite 1100
Salt Lake City, Utah 84111

[O] 801 531 7600

[E] info@edaarch.com

[W] www.edaarch.com

PROJECT ARCHITECT JB
PROJECT MANAGER SH

LICENSED PROFESSIONAL ARCHITECT
Jason Morgan
No. 5567061
5-28-2024
STATE OF UTAH

ENSIGN
THE STANDARD IN ENGINEERING

SANDY
45 W. 10000 S., Suite 500
Sandy, UT 84070
Phone: 801.255.0529

WWW.ENSIGNENG.COM

WASATCH COUNTY
COURTS EXPANSION

1361 US-40
HEBER CITY, UTAH 84032

PROJECT NUMBER 223063

#	DESCRIPTION	DATE
	PERMIT REVIEW SET	05.28.24
A2	ADDENDUM #2	06.12.24
A3	ADDENDUM #3	06.17.24

CITY ENGINEER ACCEPTANCE

Russell Funk 6/26/2024
Signature Date

NORTH

HORIZONTAL GRAPHIC SCALE
30 0 15 30 60
(IN FEET)
1 inch = 30 ft

CIVIL
DEMOLITION
PLAN

C-100

© EDA

HEBER CITY PLANNING

BENCHMARK

NORTHEAST CORNER OF SECTION 6, TOWNSHIP 4 SOUTH, RANGE 5 EAST, SALT LAKE BASE AND MERIDIAN (GOLD BRASS CAP)

ELEV = 5906.37'

811 Know what's below. Call before you dig.

CALL BLUESTAKES (811) AT LEAST 48 HOURS PRIOR TO THE COMMENCEMENT OF ANY CONSTRUCTION

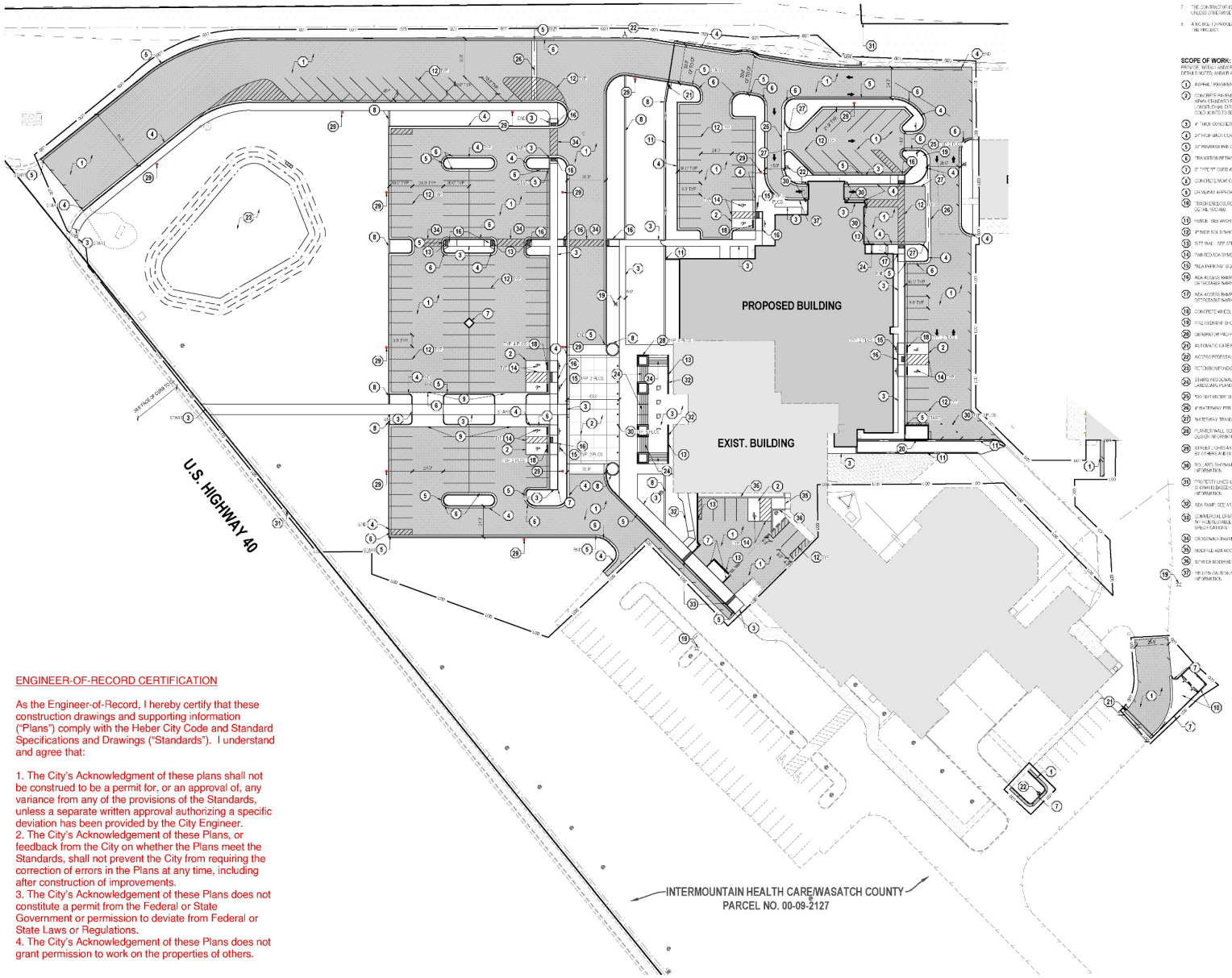

GENERAL NOTES

1. ALL PRACTICES COMPLY WITH THE HEBER CITY'S STANDARDS AND SPECIFICATIONS.
2. ALL IMPROVEMENTS MUST COMPLY WITH ADA STANDARDS AND RECOMMENDATIONS.
3. SEE LANDSCAPE/ARCHITECTURAL PLANS FOR CONCRETE MATERIAL, COLOR, FINISH, AND SCORE PATTERNS THROUGHOUT SITE.
4. ALL PAVEMENT MARKINGS SHALL CONFORM TO THE LATEST EDITION OF THE MUTCD (MANUAL ON UNIFORM TRAFFIC CONTROL DEVICES).
5. ALL SURFACE IMPROVEMENTS DISTURBED BY CONSTRUCTION SHALL BE RESTORED OR REPLACED, INCLUDING TREES AND AROUND THE SHRUBS, SOD, FENCES, WALLS, AND STRUCTURES, WHETHER OR NOT THEY ARE SPECIFICALLY SHOWN ON THE CONTRACT DOCUMENTS.
6. NOTIFY ENGINEER OF ANY DISCREPANCIES IN DESIGN OR STAKING BEFORE PLACING CONCRETE OR ASPHALT.
7. THE CONTRACTOR IS TO PROTECT AND PRESERVE ALL EXISTING IMPROVEMENTS, UTILITIES, AND SIGNS, ETC. UNLESS OTHERWISE NOTED ON THESE PLANS.
8. A NOTICE TO PROCEED MUST BE OBTAINED FROM THE HEBER CITY ENGINEER PRIOR TO DOING ANY WORK ON THIS PROJECT.

SCOPE OF WORK:

PROVIDE, INSTALL AND/OR CONSTRUCT THE FOLLOWING PER THE SPECIFICATIONS GIVEN OR REFERENCED, THE DETAILS NOTED, AND/OR AS SHOWN ON THE CONSTRUCTION DRAWINGS:

1. ASPHALT PAVEMENT PER GEOTECHNICAL REPORT AND DETAIL DG-800.
2. CONCRETE PAVEMENT PER GEOTECHNICAL REPORT AND DETAIL DG-800. CONTRACTION JOINTS AS PER APWA STANDARD PLANS 255.1, 255.2, 255.3, 255.4, AND 255.5. 13' MAXIMUM SPACING IN TRANSVERSE AND LONGITUDINAL DIRECTIONS. EXPANSION CONTRACTION JOINTS AT MAXIMUM 100' SPACING AND AT ALL COLD JOINTS TO BE INSTALLED PER APWA STANDARD PLANS 255.1, 255.2, 255.3, 255.4, AND 255.5.
3. 4" THICK CONCRETE SIDEWALK PER HEBER CITY STANDARD DETAIL STREETS-4 AND SPECIFICATIONS.
4. 24" HIGH BARRIER CURB AND GUTTER PER HEBER CITY STANDARD DETAIL STREETS-14 AND SPECIFICATIONS.
5. 30" REVERSE PAN CURB AND GUTTER PER DETAIL BG-800.
6. TRANSITION BETWEEN 30" REVERSE PAN CURB AND GUTTER AND 24" BARRIER PAN CURB AND GUTTER.
7. 8" TYPE "B" CURB WALL PER APWA STANDARD PLAN NO. 289.
8. CONCRETE MOW STRIP. SEE LANDSCAPE PLANS FOR ADDITIONAL INFORMATION.
9. DRIVEWAY APPROACH PER APWA STANDARD PLAN NO. 225.
10. TRASH ENCLOSURE. SEE ARCHITECTURAL PLANS FOR DESIGN INFORMATION. DUMPSTER ENCLOSURE PER DETAIL BG-800.
11. FENCE. SEE ARCHITECTURAL PLANS FOR ADDITIONAL INFORMATION.
12. 4" WHITE SOLID WHITE PAVEMENT MARKING PER MUTCD. STANDARD PLANS.
13. BITE WALL. SEE STRUCTURAL PLANS FOR MORE INFORMATION.
14. PAINTED ADA SYMBOL AND ASSOCIATED MARKING PER MUTCD. STANDARD PLANS.
15. "NO PARKING" SIGN PER MUTCD. STANDARD PLANS.
16. ADA ACCESS RAMP MID-BLOCK PER HEBER CITY STANDARD DETAIL STREETS-7 AND SPECIFICATIONS WITH DETECTABLE WARNING SURFACE.
17. ADA ACCESS RAMP CORNER PER HEBER CITY STANDARD DETAIL STREETS-7 AND SPECIFICATIONS WITH DETECTABLE WARNING SURFACE.
18. CONCRETE WHEEL STOP PER DETAIL DG-800.
19. FIRE HYDRANT SHOWN FOR REFERENCE.
20. GENERATOR PAD PER ARCHITECTURAL AND ELECTRICAL PLANS.
21. AUTOMATIC GATE PER ARCHITECTURAL AND ELECTRICAL PLANS.
22. ACCESS PEDESTAL PER ARCHITECTURAL AND ELECTRICAL PLANS.
23. RETENTION POND DETAILS PER C-300 AND LANDSCAPING PER LANDSCAPING PLANS.
24. STAIRS PER DETAIL. SEE GRADING PLAN FOR ELEVATION INFORMATION. SEE ARCHITECTURAL AND LANDSCAPE PLANS FOR DETAILS AND ADDITIONAL INFORMATION.
25. "DO NOT ENTER" SIGN PER MUTCD. STANDARD PLANS.
26. ADA PATHWAY PER HEBER CITY STANDARD DETAIL STREETS-4 AND SPECIFICATIONS.
27. PATHWAY TRANSITION STRUCTURE PER APWA STANDARD PLAN NO. 213.
28. PLANTER WALL. SEE GRADING PLAN FOR ELEVATION INFORMATION. SEE ARCHITECTURAL PLANS FOR DESIGN INFORMATION.
29. STREET LIGHTS ARE SHOWN FOR REFERENCE ONLY. INFORMATION SHOWN IS BASED ON WORK COMPLETED BY OTHERS AND IS SUBJECT TO CHANGE. SEE ELECTRICAL PLANS FOR MORE INFORMATION.
30. BOLLARD SHOWN FOR REFERENCE. SEE LANDSCAPE AND ARCHITECTURAL PLANS FOR MORE INFORMATION.
31. PROPERTY LINES ILLUSTRATED ON THIS DRAWING ARE SHOWN FOR REFERENCE ONLY. SEE INFORMATION SHOWN BASED ON WORK COMPLETED BY OTHERS. REFER TO THE ALTA SURVEY FOR ADDITIONAL INFORMATION.
32. ADA RAMP. SEE ARCHITECTURAL PLANS FOR MORE INFORMATION. SEE C-300 FOR GRADING INFORMATION.
33. COMMERCIAL DRIVEWAY APPROACH PER HEBER CITY STANDARD DETAIL STREETS-6 AND SPECIFICATIONS WITH DETECTABLE WARNING SURFACE PER HEBER CITY STANDARD DETAIL STREETS-8 AND SPECIFICATIONS.
34. CROSSWALK PAVEMENT MARKING PER MUTCD. STANDARD PLANS.
35. MODIFIED ADA ACCESS RAMP PER APWA STANDARD PLAN NO. 236.1.
36. 30" HEIGHT MODIFIED CURB PER APWA STANDARD PLAN NO. 200.
37. YELLOW CAUTION PAINT PER MUTCD STANDARDS AT VARIABLE CURB. SEE C-300 FOR GRADING INFORMATION.

E D A

[A] The Boston Building
9 Exchange Place, Suite 1100
Salt Lake City, Utah 84111

[O] 801 531 7600

[E] info@edaarch.com

[W] www.edaarch.com

PROJECT ARCHITECT JB
PROJECT MANAGER SH

LICENSED PROFESSIONAL ENGINEER
Russell Morgan
No. 5567067
5-28-2024
STATE OF UTAH

ENSIGN
THE STANDARD IN ENGINEERING

SANDY
45 W 10000 S, Suite 500
Sandy, UT 84070
Phone: 801.255.0529

WWW.ENSIGNENG.COM

WASATCH COUNTY
COURTS EXPANSION

1361 US-40
HEBER CITY, UTAH 84032

PROJECT NUMBER	223063
# DESCRIPTION	DATE
PERMIT REVIEW SET	05.28.24
1 ADDENDUM #2	06.12.24

CITY ENGINEER ACCEPTANCE

Russell Morgan — 6/26/2024
Signature — Date

NORTH

HORIZONTAL GRAPHIC SCALE
30 0 15 30 60
(IN FEET)
HORZ 1 inch = 30 ft

CIVIL
SITE
PLAN

C-200

© EDA

ENGINEER-OF-RECORD CERTIFICATION

As the Engineer-of-Record, I hereby certify that these construction drawings and supporting information ("Plans") comply with the Heber City Code and Standard Specifications and Drawings ("Standards"). I understand and agree that:

1. The City's Acknowledgment of these plans shall not be construed to be a permit for, or an approval of, any variance from any of the provisions of the Standards, unless a separate written approval authorizing a specific deviation has been provided by the City Engineer.
2. The City's Acknowledgement of these Plans, or feedback from the City on whether the Plans meet the Standards, shall not prevent the City from requiring the correction of errors in the Plans at any time, including after construction of improvements.
3. The City's Acknowledgement of these Plans does not constitute a permit from the Federal or State Government or permission to deviate from Federal or State Laws or Regulations.
4. The City's Acknowledgement of these Plans does not grant permission to work on the properties of others.

HEBER CITY PLANNING

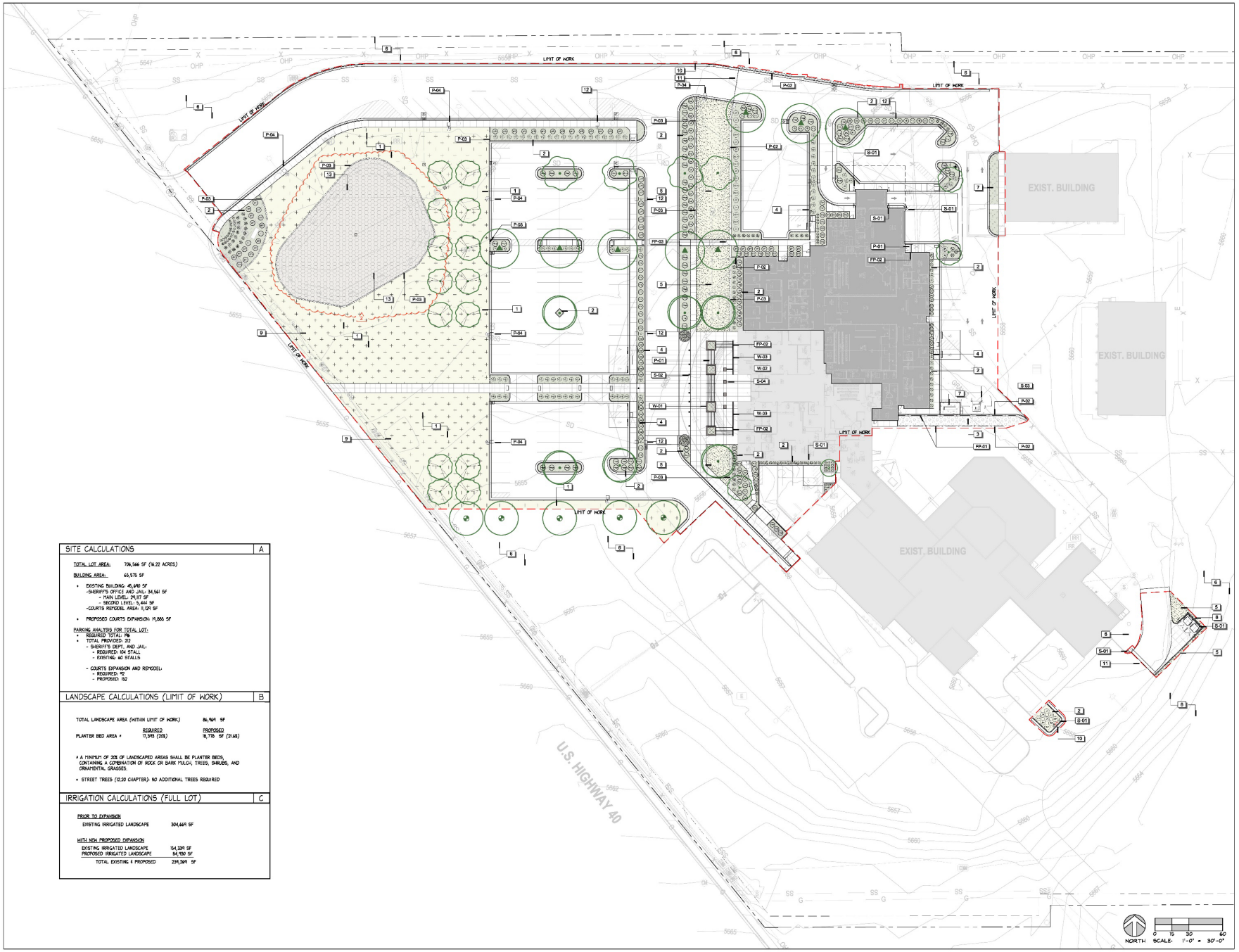

SITE CALCULATIONS | A

TOTAL LOT AREA: 706,546 SF (16.22 ACRES)

BUILDING AREA: 65,575 SF

- EXISTING BUILDING: 45,640 SF
  - SHERIFF'S OFFICE AND JAIL: 34,561 SF
    - MAIN LEVEL: 29,117 SF
    - SECOND LEVEL: 5,444 SF
  - COURTS REMODEL AREA: 11,079 SF
- PROPOSED COURTS EXPANSION: 19,935 SF

PARKING ANALYSIS FOR TOTAL LOT:

- REQUIRED TOTAL: 196
- TOTAL PROVIDED: 212
  - SHERIFF'S DEPT. AND JAIL:
    - REQUIRED: 104 STALL
    - EXISTING: 60 STALLS
  - COURTS EXPANSION AND REMODEL:
    - REQUIRED: 92
    - PROPOSED: 152

LANDSCAPE CALCULATIONS (LIMIT OF WORK) | B

TOTAL LANDSCAPE AREA (WITHIN LIMIT OF WORK) 86,964 SF

	REQUIRED	PROPOSED
PLANTER BED AREA *	17,393 (20%)	18,778 SF (21.6%)

* A MINIMUM OF 20% OF LANDSCAPED AREAS SHALL BE PLANTER BEDS, CONTAINING A COMBINATION OF ROCK OR BARK MULCH, TREES, SHRUBS, AND ORNAMENTAL GRASSES.

- STREET TREES (12.20 CHAPTER): NO ADDITIONAL TREES REQUIRED

IRRIGATION CALCULATIONS (FULL LOT) | C

PRIOR TO EXPANSION

EXISTING IRRIGATED LANDSCAPE 304,669 SF

WITH NEW PROPOSED EXPANSION

EXISTING IRRIGATED LANDSCAPE	54,339 SF
PROPOSED IRRIGATED LANDSCAPE	84,930 SF
TOTAL EXISTING + PROPOSED	239,269 SF

E D A

[A] The Boston Building
9 Exchange Place, Suite 1100
Salt Lake City, Utah 84111

[O] 801 531 7920

[E] info@edasrch.com

[W] www.edasrch.com

PROJECT ARCHITECT RG
PROJECT MANAGER EP

LICENSED LANDSCAPE ARCHITECT
Richard L. Gilbert
No. 5734299
Expires 12/31/24
April 24, 2024
STATE OF UTAH

Arc Sitio Design, Inc
Landscape Architecture & Architectural Site Design
1058 East 2100 South Salt Lake City, Utah 84106
office 801 487 4923 www.arcsitiodesign.com

WASATCH COUNTY
COURTS EXPANSION

1361 US-40
HEBER CITY, UT 84032

PROJECT NUMBER XXXXXX

#	DESCRIPTION	DATE
1	PERMIT REVIEW SET	04.24.24
2	ADDENDUM #2	05/13/24

LANDSCAPE PLAN

L-L101

24 APRIL 2024 © EDA

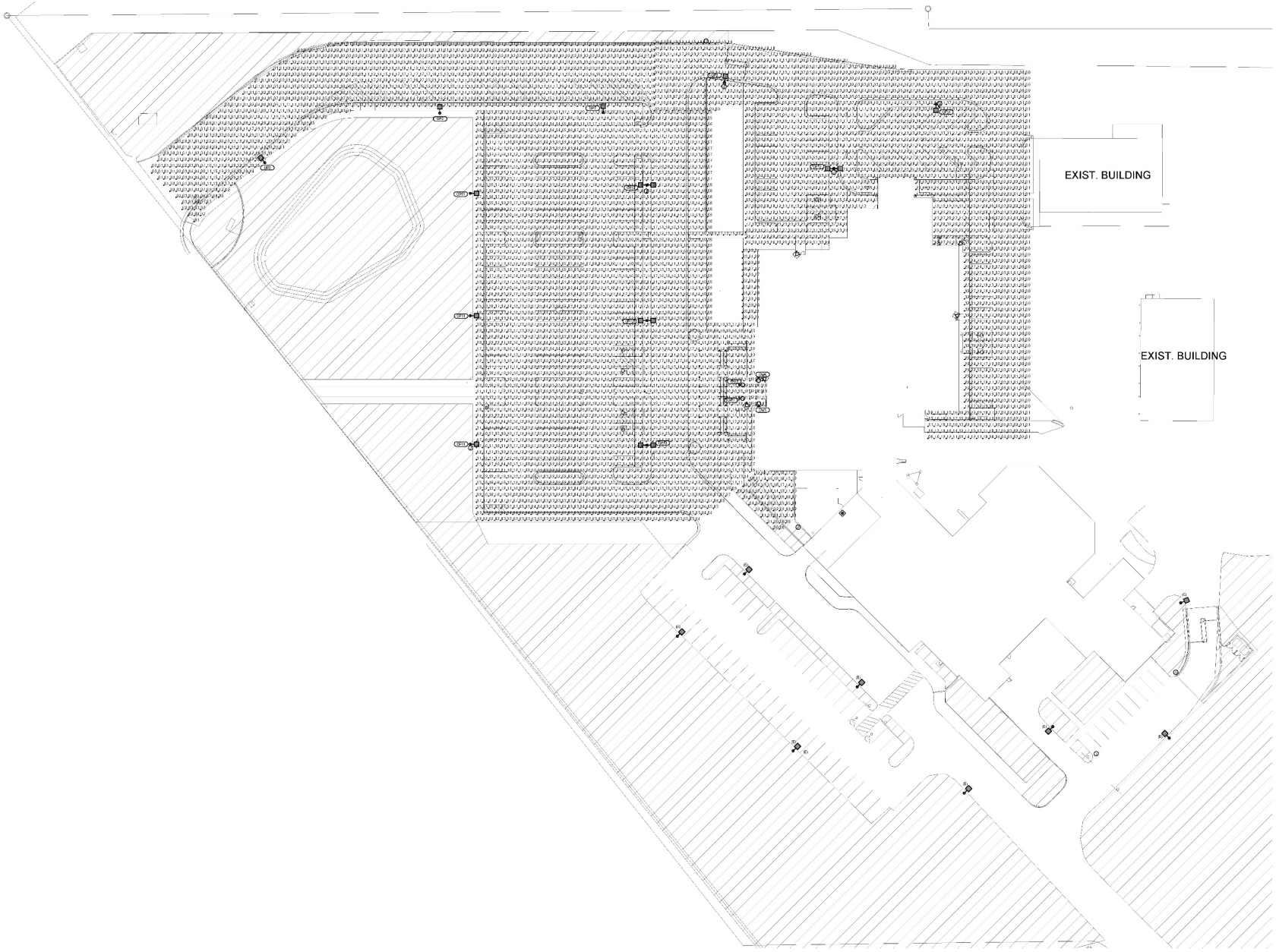

PHOTOMETRIC SITE PLAN
SCALE = 1" = 30'-0"

E D
A

[A] The Boston Building
9 Exchange Place, Suite 1100
Salt Lake City, Utah 84111

[O] 801 531 7600

[E] info@edaarch.com

[W] www.edaarch.com

PROJECT ARCHITECT JB
PROJECT MANAGER SH

NOT FOR CONSTRUCTION

BNA CONSULTING

WASATCH COUNTY COURTS EXPANSION

1361 US-40
HEBER CITY, UTAH 84032

PROJECT NUMBER 223053

#	DESCRIPTION	DATE
	Permit Review Set	04.24.24

PHOTOMETRIC SITE PLAN

ES2

23 MAY 2024

© EDA

5/13/2024 1:43:03 PM

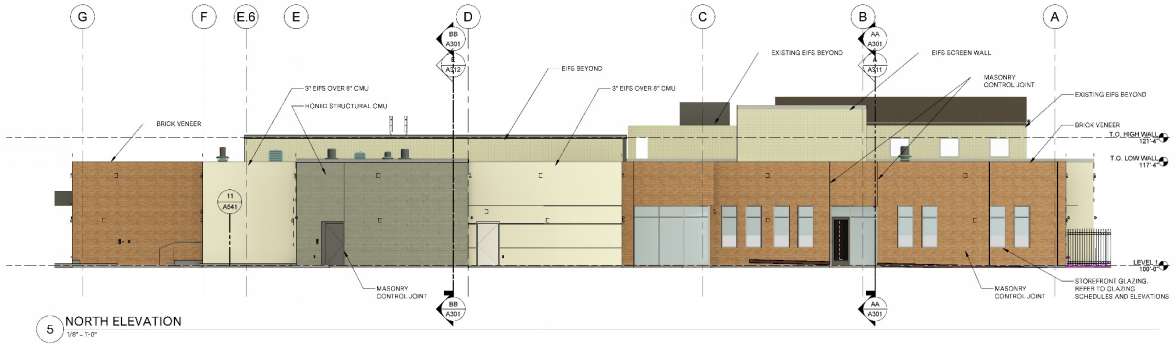

5 NORTH ELEVATION
1/8" = 1'-0"

ELEVATION FINISH TAKE-OFFS		
WEST ELEVATION		
EIFS	1,064 SF	19%
CMU	455 SF	21%
BRICK	957 SF	48%
GLAZING	324 SF	16%
STONE	0 SF	0%
EAST ELEVATION		
EIFS	862 SF	24%
CMU	296 SF	8%
BRICK	2,037 SF	57%
GLAZING	371 SF	10%
STONE	0 SF	0%
NORTH ELEVATION		
EIFS	682 SF	22%
CMU	520 SF	16%
BRICK	1,669 SF	52%
GLAZING	286 SF	9%
STONE	0 SF	0%
SOUTH ELEVATION		
EIFS	406 SF	46%
CMU	0 SF	0%
BRICK	452 SF	51%
GLAZING	31 SF	3%
STONE	0 SF	0%

*THIS INCLUDES SCREEN WALLS, AND PARAPET SET BACK FROM FIRST WALL PLANE

EXTERIOR FINISH LEGEND
EIFS - COLOR 1 - IMPACT RESISTANT
EIFS - COLOR 2
SANDSTONE - MATCH EXISTING
HONED STRUCTURAL CMU - CREAM
4X4X16 EMPEROR BRICK VENEER

E D
A

[A] The Boston Building
9 Exchange Place, Suite 1100
Salt Lake City, Utah 84111

[O] 801.531.7600

[E] info@edarch.com

[W] www.edarch.com

PROJECT ARCHITECT JR
PROJECT MANAGER SH

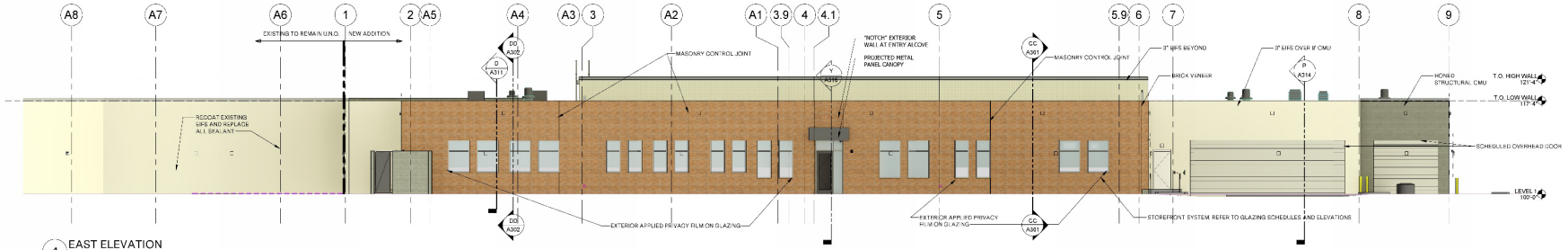

4 EAST ELEVATION
1/8" = 1'-0"

WASATCH COUNTY
COURTS EXPANSION

1361 US-40
HEBER CITY, UTAH 84032

PROJECT NUMBER	223053
# DESCRIPTION	DATE
DD SET	02.26.24
PERMIT REVIEW SET	04.24.24
FINAL BID PACKAGE	MM.DD.YY

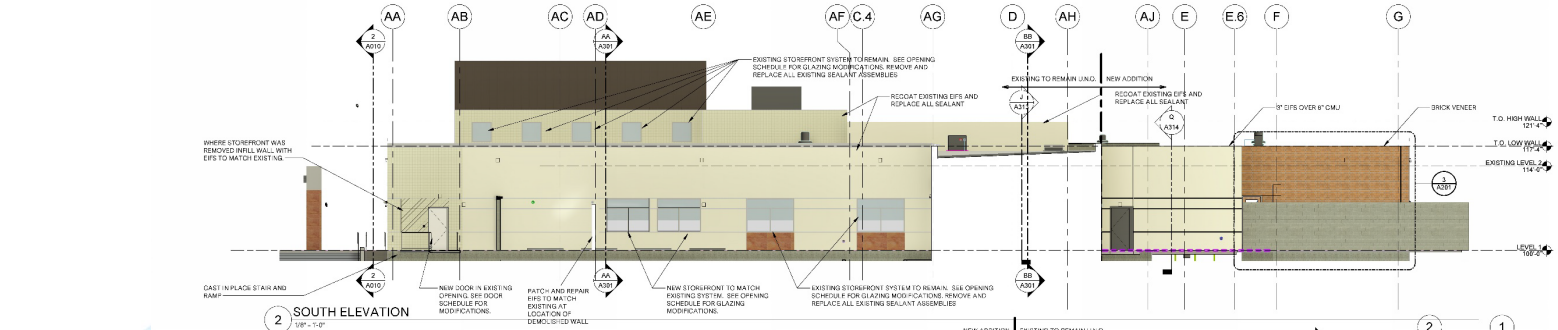

2 SOUTH ELEVATION
1/8" = 1'-0"

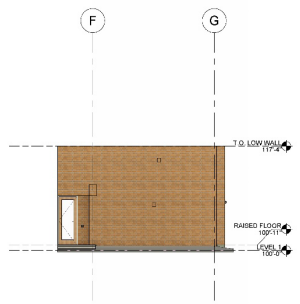

3 SOUTH ELEVATION BEYOND
1/8" = 1'-0"

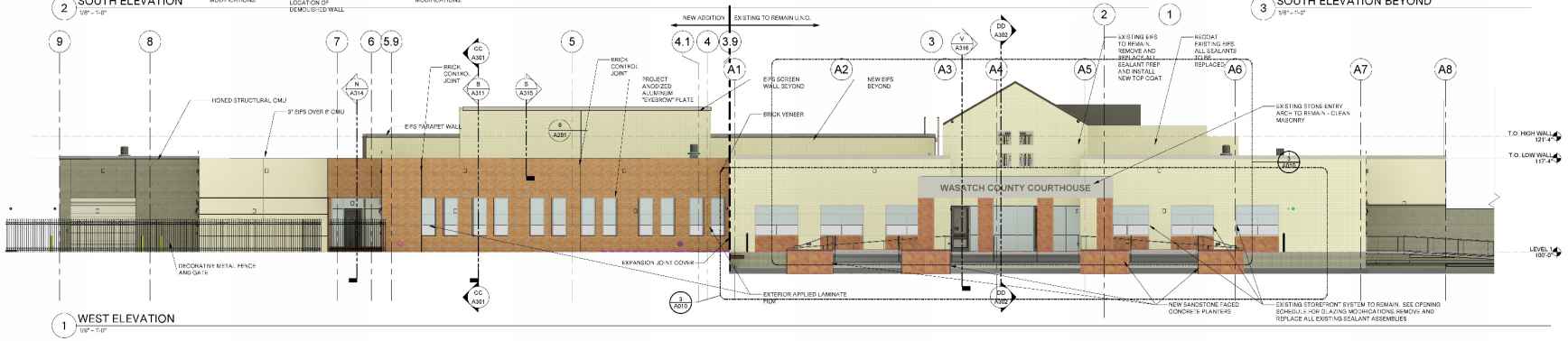

1 WEST ELEVATION
1/8" = 1'-0"

BUILDING
ELEVATIONS

A201

24 MAY 2024

© EDA

5/17/2024 3:22:03 PM

Staff Recommendation (Site Plan)

Staff recommends that the Planning Commission approve the **Wasatch County Courts Expansion Site Plan** subject to findings and conditions:

Findings

1. The application is consistent with the Municipal Zoning Code.
2. The application is consistent with the General Plan.

Conditions

1. All requirements of the City Engineer shall be met.
2. All other Code Requirements shall be met.
3. Any other conditions or changes as articulated by the Planning Commission

Staff Recommendation (CUP)

Staff recommends that the Planning Commission approve the request for a **Conditional Use Permit (CUP)** subject to findings and conditions:

Findings

1. The application is consistent with the Municipal Zoning Code.
2. The application is consistent with the General Plan.
3. The proposed conditional use shall comply with City ordinances and Federal and State Law as applicable to the site where the conditional use is located.

Conditions

1. All requirements of the City Engineer shall be met.
2. All other Code Requirements shall be met.
3. Any other conditions or changes as articulated by the Planning Commission.

Discussion

Planning Commission Staff Report

MEETING DATE: 7/9/2024
SUBJECT: Amendment to the Annexation Policy Plan
RESPONSIBLE: Tony Kohler
DEPARTMENT: Planning
STRATEGIC RELEVANCE: Community Development

SUMMARY

The City Council has asked the Planning Commission to provide a recommendation on a potential amendment to the City's Annexation Policy Plan by including the Wellberg Property as part of the Expansion Area Map. The Planning Commission held a Public Hearing on June 25 and invited the affected entities to comment, including Wasatch County and the Twin Creeks Special Service District. The Policy Questions include: What concerns do Wasatch County and the Twin Creeks Special Service District as Affected Entities have regarding the City amending the City's Expansion Area Map to include the Wellberg property to the east of Red Ledges?

RECOMMENDATION

Staff recommends approval of the proposed amendment to the Annexation Policy Plan that includes the Wellberg Property and Baum Property.

BACKGROUND

The City has accepted a petition for annexation of the Wellberg property (see exhibits). Currently, the City's Expansion Area Map which is part of the City's Annexation Policy Plan, does not include the Wellberg property. Utah State Code Section 10-2-401.5 (see exhibits) identifies the process for amending this policy, which requires (1) a public meeting with the Planning Commission and Affected Entities (county, special districts, etc.); (2) a public hearing with the Planning Commission and Affected Entities; and (3) a public hearing with the City Council and Affected Entities. April 9 was the first meeting of the process to amend the Annexation Policy Plan, and its purpose, as per Utah State Code was to allow affected entities to examine the proposed addition to the Expansion Area Map and provide input on it.
The Baum family reached out to the City and asked the City to add the remainder of their property to the Expansion Area Map. On June 25, the Planning Commission held a public hearing and invited the Affected Entities to comment. No additional comments have been received from the County or

the Twin Creeks/North Village Special Service District for 10 days after the Public Hearing, as required by State Code.

DISCUSSION

On June 25, the Planning Commission discussed a gentleman's agreement between the City and County about the City not expanding to the east of Mill Road. In 2018 when Heber City expanded its Annexation Policy Plan to include the Sorenson properties, the City and County discussed a gentleman's agreement, researched the issue, and found no agreement existed. This was the impetus for adopting a formal written agreement, the MOU (attached for reference) to address this issue and other issues between the City and County. Within this MOU, there is a provision whereby Heber City agrees to maintain the City's expansion area no further east than Mill Road (aka 1200 East), no further west than the bypass, and no further west than the eastern boundary of the Heber Valley Special Service District Sewer Fields.
It was generally assumed that expansion to the east meant any properties south of Center Street, given that Red Ledges is already east of Mill Road; however, that is not specified in the agreement. Wasatch County Planning has been invited to the Tuesday meeting to comment on this issue.

FISCAL IMPACT

None.

CONCLUSION

The proposed amendment to the Annexation Policy Plan is consistent with the MOU with Wasatch County, as the MOU was intended to protect SSD viability east of Mill Road by ensuring the SSDs provide water and sewer services within their specified areas as intended.
Alternatives include:

1. Approve as proposed
2. Approve as amended in the meeting
3. Continue
4. Deny

ALTERNATIVES

Staff Recommended Option - Approval

I move to **approve** the item as presented, with the findings and conditions as presented in the conclusion above.

Alterntive 2 - Continuance

I move to **continue** the item to another meeting on , with direction to the applicant and/or Staff on information and / or changes needed to render a decision, as follows:

Alternative 3 - DENIAL
I move to **deny** the item with the following findings.

POTENTIAL MOTIONS

ACCOUNTABILITY

Department: Planning
Staff member: Tony Kohler, Community Development Director

EXHIBITS

1. MOU
2. Municipalities
3. Annexation Policy Plan Amendment 2024
4. Baum Addition
5. Wellburg Addition
6. Wellberg Annexation Concept
7. 10-2 Utah Code Annexation Policy Plan
8. Adopted Annexation Policy Plan

HEBER CITY EXPANSION AREA MOU

MEMORANDUM OF UNDERSTANDING
BETWEEN WASATCH COUNTY
AND HEBER CITY

1. **Parties.** This Memorandum of Understanding (hereinafter referred to as "MOU") is made and entered into by and between Wasatch County, whose address is 25 North Main Street, Heber City, Utah 84032, and Heber City Corporation, whose address is 75 North Main Street, Heber City, Utah 84032.

2. **Purpose.** The purpose of this MOU is to establish the terms and conditions under which Wasatch County and Heber City will implement multi-jurisdictional annexation, land use and utility service policies.

3. **Term of MOU.** This MOU is effective upon the day and date last signed and executed by the duly authorized representatives of the parties to this MOU and the governing bodies of the parties' respective counties or municipalities and shall remain in full force and effect for not longer than 30 years This MOU may be terminated, without cause, by either party upon 60 days written notice, which notice shall be delivered by hand or by certified mail to the address listed above.

4. **Responsibilities of Wasatch County.**

   a. Invite Heber City Planning to Development Review Committee Meetings when urban development is proposed within the City's Expansion Area as shown in Exhibit A.

   b. Invite Heber City Planning Department to Public Hearings involved in amendments to zones, ordinances and standards affecting properties within the City's Expansion Area.

   c. The North Village Special Service District (NVSSD), Twin Creeks Special Service District (TCSSD) and Jordanelle Special Service District (JSSD) agree to provide and maintain all water, secondary water, and sewer service within their respective service areas, unless those districts and Heber City mutually agree at the time of development that these services should be provided in another manner.

   d. Ask property owners proposing urban development within the City's Expansion Area to first talk with Heber City regarding development in the City

e. At the request of Heber City, agree to leave an unincorporated island for Wasatch View Estates through the annexation process if there are a significant number of property owners who object to being annexed into Heber City.

f. Continue to accept open space dedications by Jordanelle Ridge, with the intent to maintain it as open space in perpetuity with the only allowed improvements being back country trails. County may enter into agreements with a third party open space holder.

g. County will review all improvements outside of City and may or may not require dedication of roads. If streets are constructed and dedicated to County standards outside of City limits, the County will accept such dedication and maintain them.

h. The Wasatch County Fire District will perform all fire inspections related to development in special service district areas, and will collect the same fire inspection fees that are assessed on a county-wide basis.

5. **Responsibilities of Heber City.**

a. Invite Wasatch County Planning and its Special Service Districts and Fire District to all Development Review Committee Meetings when development is proposed within Special Service District areas as shown in Exhibit B.

b. Invite Wasatch County Planning to Public Hearings involved in amendments to zones, ordinances and standards affecting properties within Special Service District areas.

c. Involve Wasatch County in the review of annexations within Special Service District areas to analyze the following public service issues:

1) Consideration for regional county park facilities and open space.

2) Consideration for dedication of Fire Stations.

3) Consideration for Sewer, water and irrigation.

4) Consideration for dedication of elementary, middle, and high school sites.

5) Consideration for other necessary public facilities provided by each of the parties.

d. Require proposed development within special service district areas to be reviewed by the Wasatch County Water Board prior to granting of development approvals.

e. Require receipt of payment for fire district and special service district fees prior to issuance of building permits.

f. Require all final subdivision plats be signed by the appropriate special service district.

g. Maintain entitlement requirements for projects annexed into the city including but not limited to requirements for open space, trails, architectural standards, landscaping, densities etc., unless both parties agree that such changes would be more beneficial to the County and City.

h. Permitted residential densities within special service district areas shall be in accordance with vested rights and/or adopted codes.

i. Involve Wasatch County in the review of proposed annexations and developments within special service district areas to ensure developers dedicate the appropriate required open space as part of their previously approved master plans. Specifically, Jordanelle Ridge (aka Sorenson Properties) has committed to dedicate a significant area of open space to Wasatch County. The development agreement with Jordanelle Ridge is still in force and requires dedication of open space with every plat recorded.

j. Unless agreed to by the county and city, the city will maintain the City's expansion area no further east than Mill Road (aka 1200 East), no further west than the bypass, and no further west than the eastern boundary of the Heber Valley Special Service District sewer fields.

6. **Mutual Responsibilities.**

a. Heber City and Wasatch County are each committed to maintaining the North Fields as an agricultural area. As such, zone changes, municipal annexation and extension of urban services into the North Fields should be avoided, though this is not intended to infringe upon the legislative discretion of either party.

b. Development, and/or annexations along the future bypass will include the acquisition and/or dedication of bypass right of way at a width of 124 feet or current UDOT standards by the applicable entity.

c. Wasatch County will establish a mechanism that provides Heber City with representation to key SSDs that allows input on critical water and sewer issues occurring within or potentially impacting the city.

d. Explore avenues to partner for the purpose of optimizing water and sewer service delivery to achieve redundancy, operational efficiencies and cost savings/avoidance.

e. Heber City and Wasatch County will continue to work on a common affordable housing agreement.

7. **Conflict Resolution.** In the event either party determines there is a conflict in the implementation of these responsibilities, either party may arrange for an interlocal board to be convened to review the matter. Such interlocal board should consist of 3 Wasatch County representatives, including a County Councilman, the County Manager and the County

Planner; and 3 Heber City representatives, including the Mayor, City Manager and the City Planner.

8. **Signatures.** In witness whereof, the parties to this MOU through their duly authorized representatives have executed this MOU on the days and dates set out below, and certify that they have read, understood, and agreed to the terms and conditions of this MOU as set forth herein.

The effective date of this MOU is the date of the signature last affixed to this page.

WASATCH COUNTY

2/4/19

~~Greg McPhie~~, Council Chairman — Date

Danny Goode

HEBER CITY

2/8/19

Kelleen Potter, Mayor — Date

2/4/2019

Attest: Heber City Recorder — Date

EXHIBIT A: HEBER CITY EXPANSION AREA

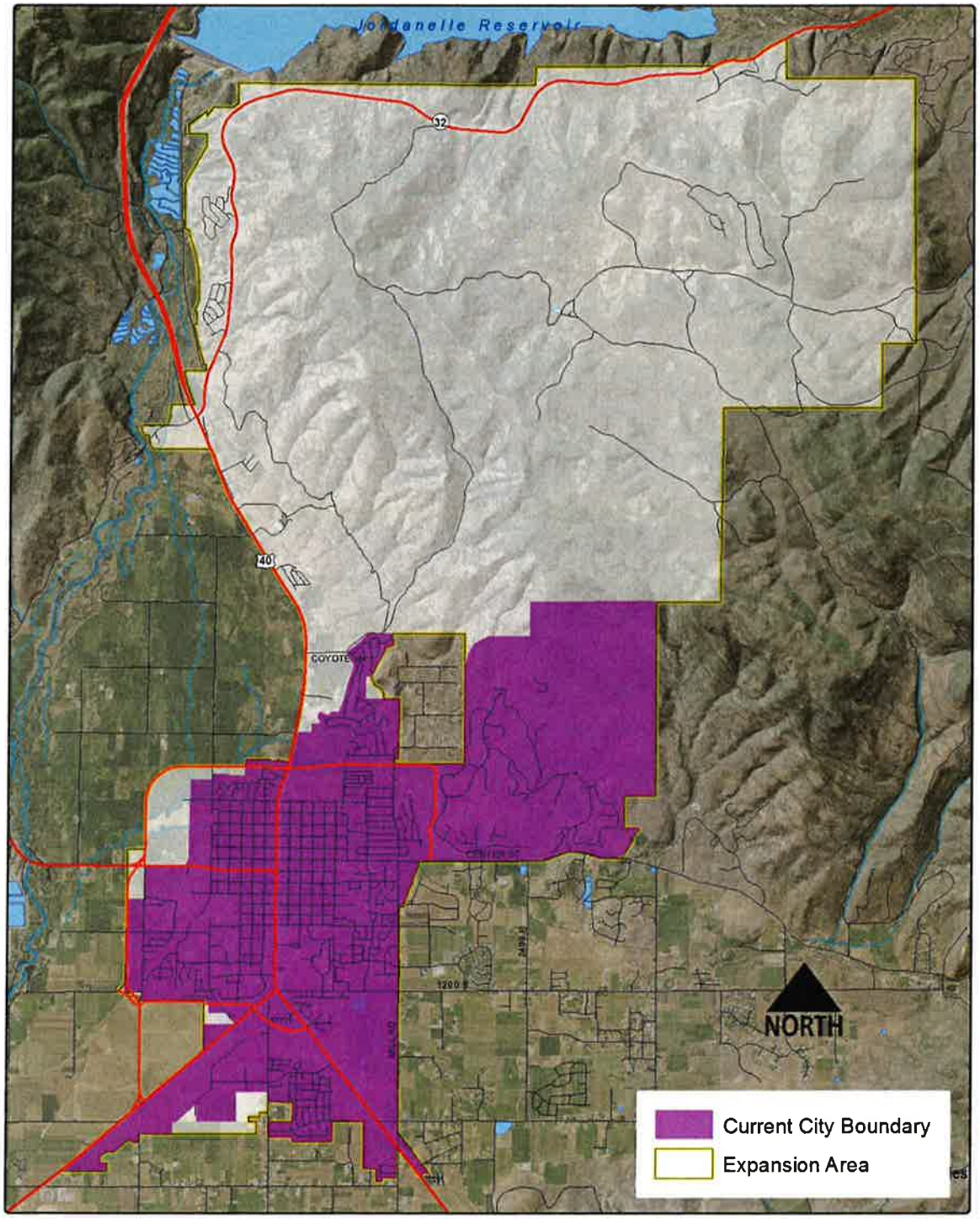

EXHIBIT B: SPECIAL SERVICE DISTRICT AREAS

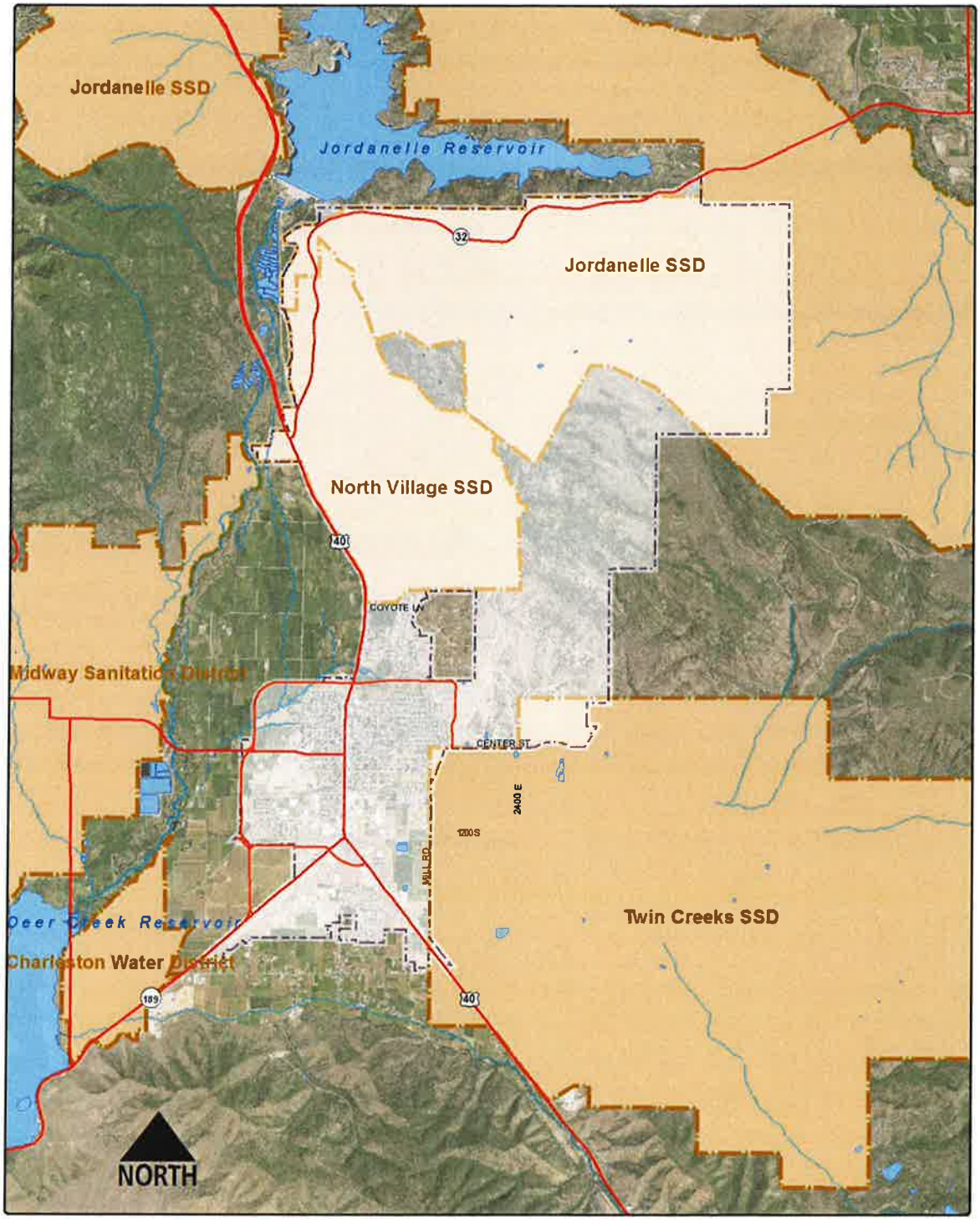

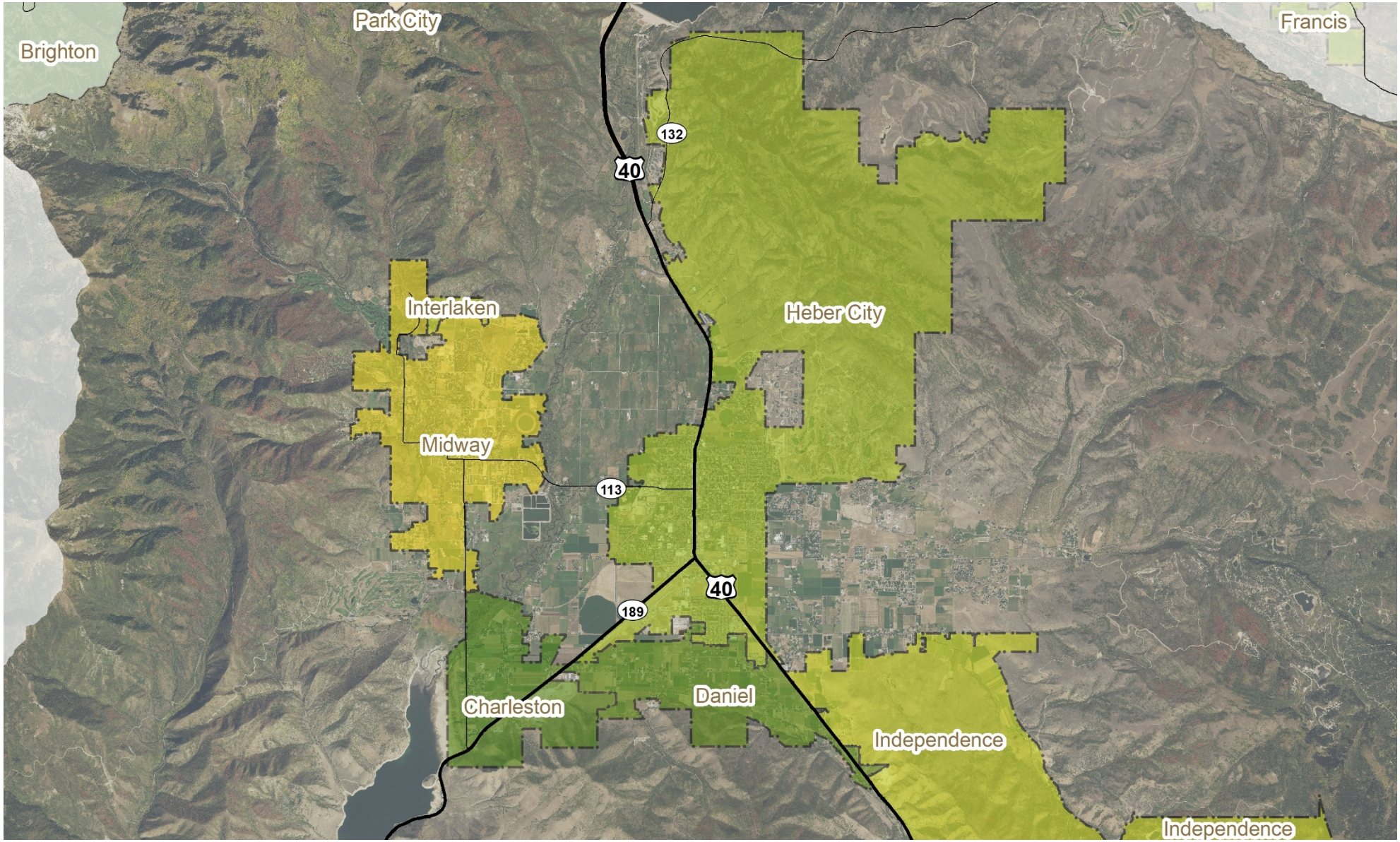
Brighton
Park City
Francis
132
40
Interlaken
Heber City
Midway
113
40
189
Charleston
Daniel
Independence
Independence

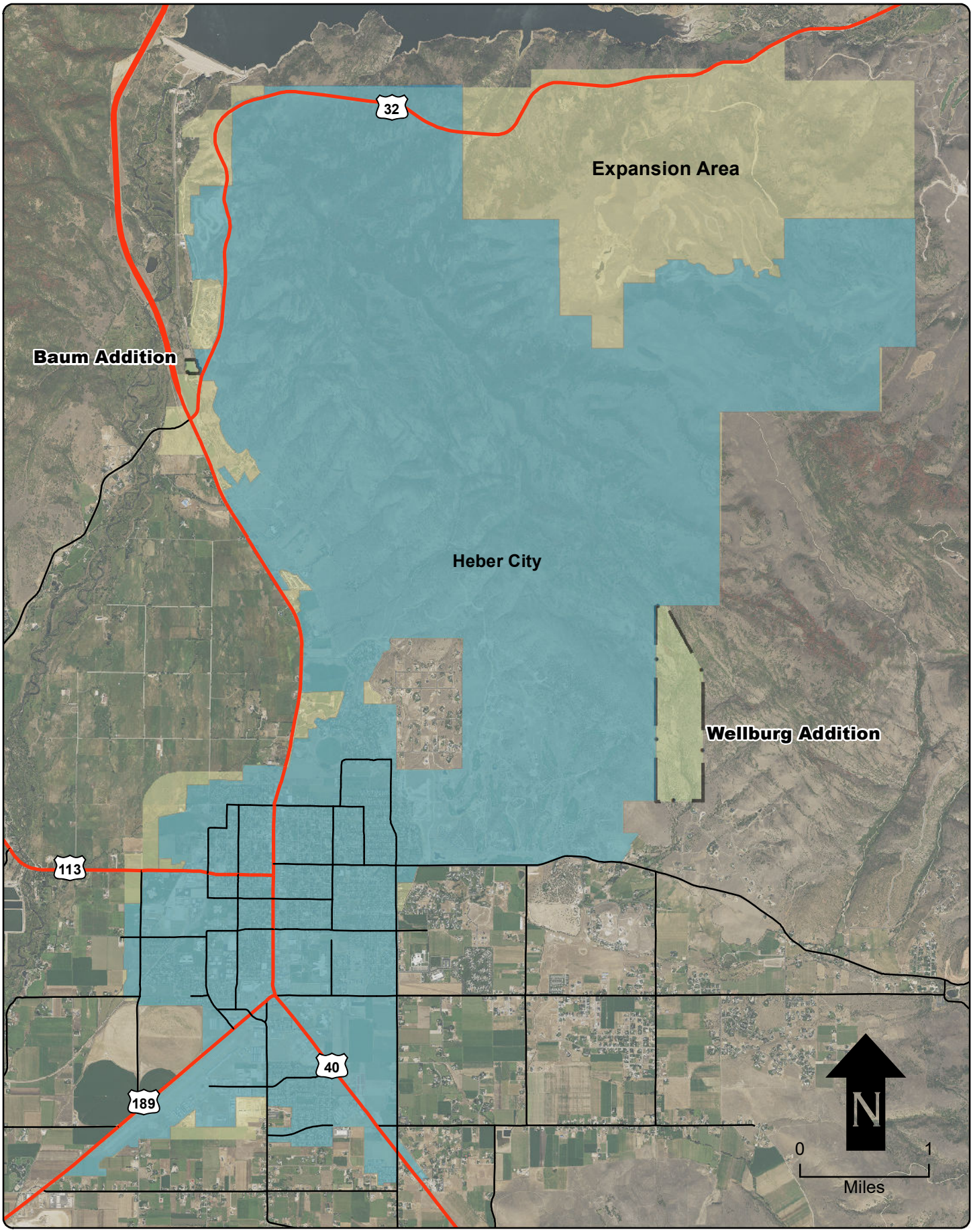

Heber City Annexation Policy Plan Amendment

April 9, 2024

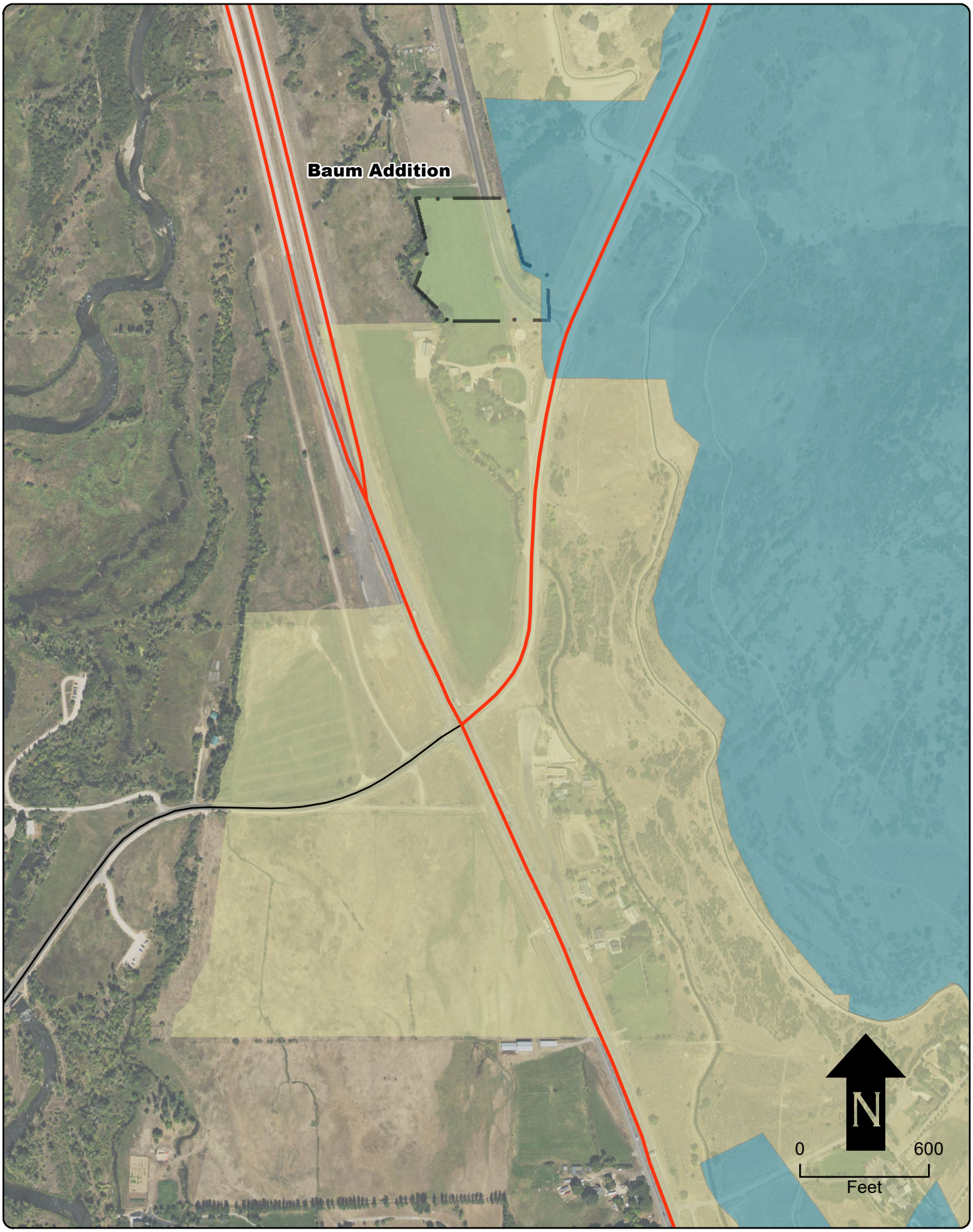

Heber City Annexation Policy Plan Amendment

April 9, 2024

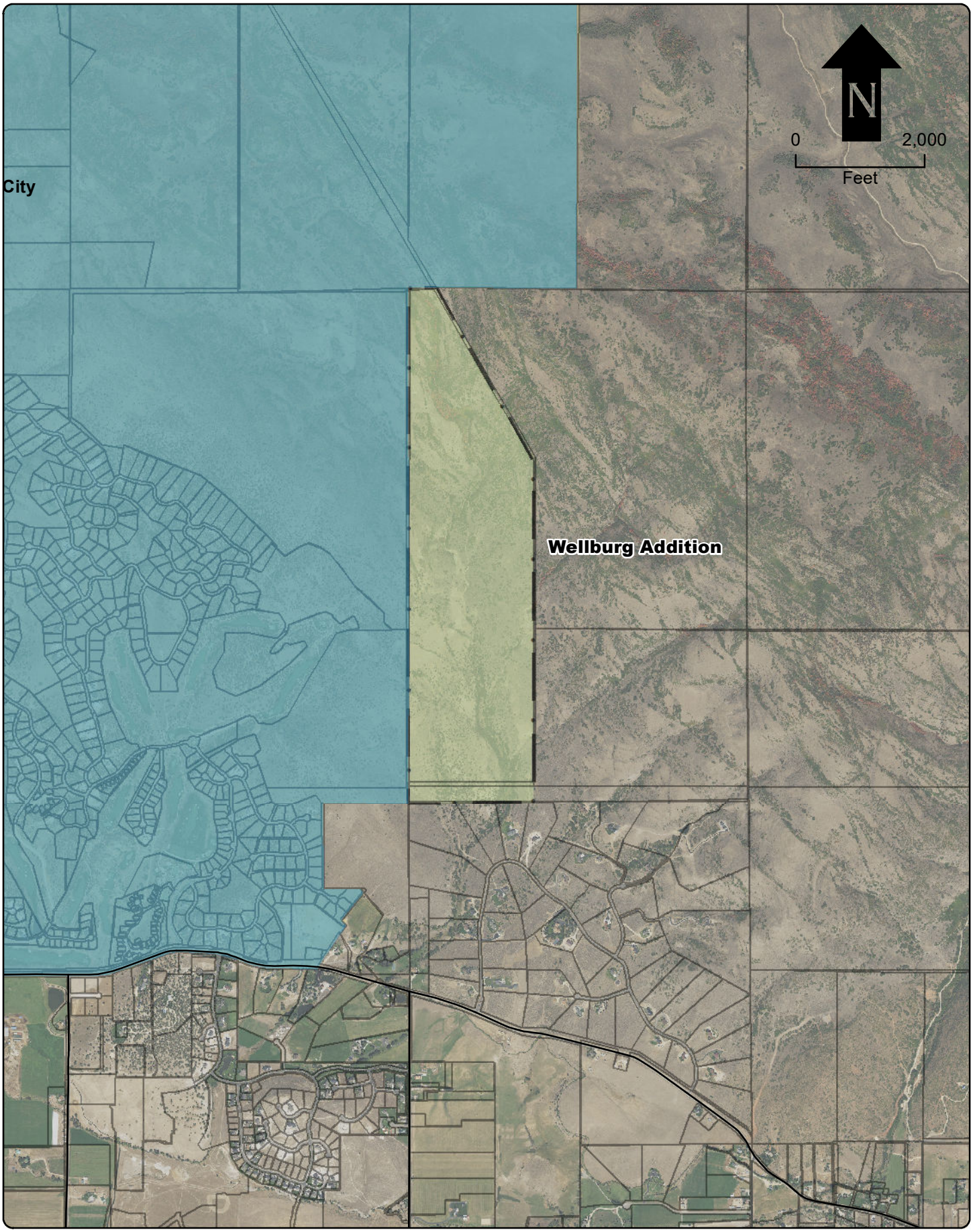

Heber City Annexation Policy Plan Amendment

April 9, 2024

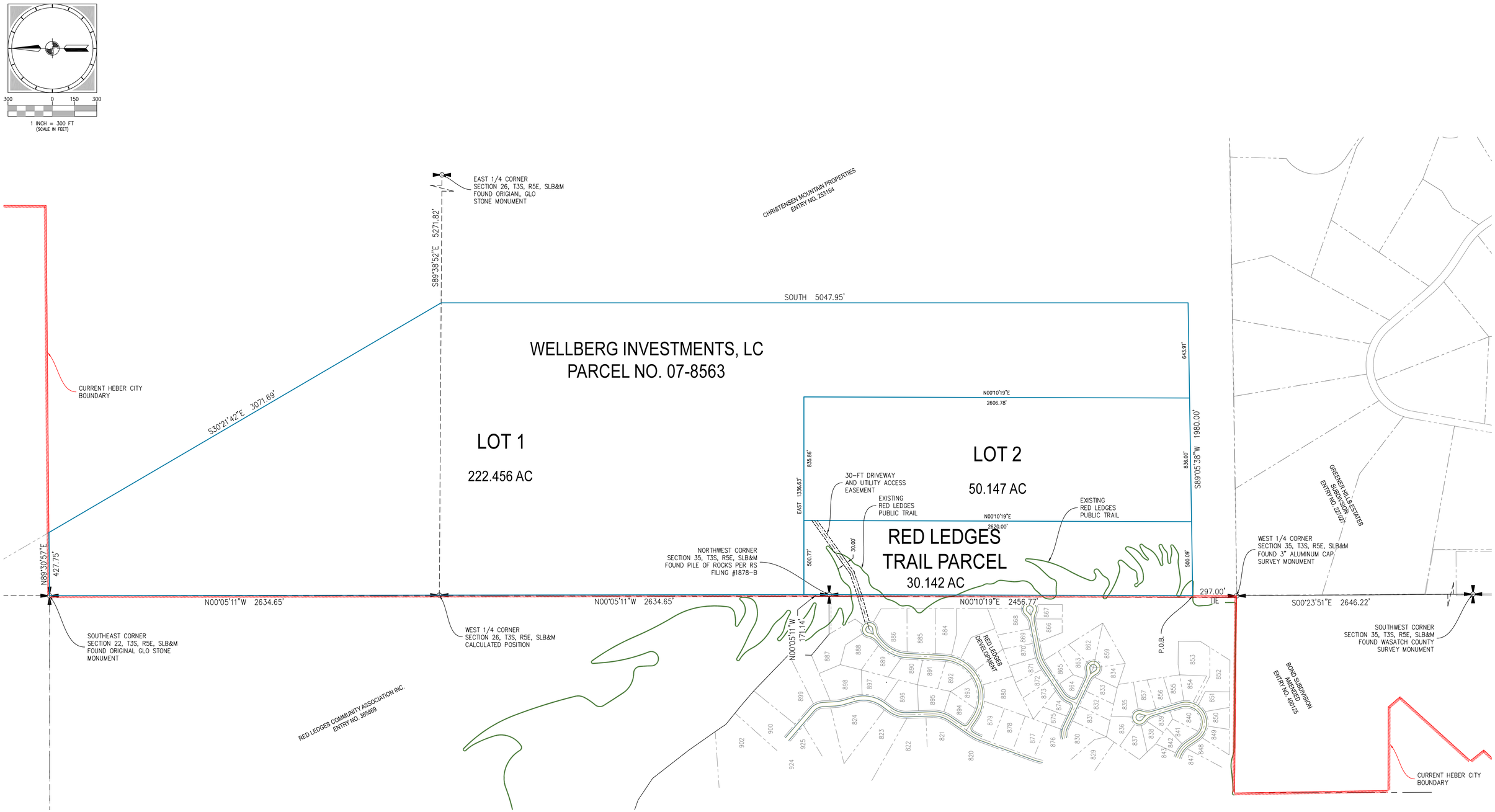

PROJECT	PREPARED FOR		LOCATED IN THE NORTHEAST 1/4 OF SECTION 01, TOWNSHIP 01 SOUTH, RANGE 01 EAST, SLB&M	DRAWN BY: SMT	ATWELL 866.850.4200 www.atwell-group.com 55 WEST CENTER • P.O. BOX 176 HEBER CITY, UTAH 84032 P: 435-654-9229 •F: 435-654-9231	COPYRIGHT © 2024 ATWELL, LLC
2400529	RHK HOLDINGS / PAUL KRUGER	ANNEXATION CONCEPT EXHIBIT		REVIEWED BY: MPJ		DRAWING ALTERATION
SHEET 1 OF 1	PROJECT KRUGER SUBDIVISION & ANNEXATION		WASATCH COUNTY, UTAH	SCALE: 1" = 300' / ISSUE DATE 02/13/2024		IT IS A VIOLATION OF LAW FOR ANY PERSON, UNLESS ACTING UNDER THE DIRECTION OF THE PROFESSIONAL LAND SURVEYOR TO ALTER ANY ITEM ON THIS DOCUMENT IN ANY WAY. ANY LICENSEE, WHO ALTERS THIS DOCUMENT IS REQUIRED BY LAW TO AFFIX THEIR SEAL AND THE NOTATION "ALTERED BY" FOLLOWED BY THEIR SIGNATURE AND SPECIFIC DESCRIPTION OF THE ALTERATIONS.

10-2-401.5. Annexation policy plan.

(1) No municipality may annex an unincorporated area located within a specified county unless the municipality has adopted an annexation policy plan as provided in this section.

(2) To adopt an annexation policy plan:

(a) the planning commission shall:

(i) prepare a proposed annexation policy plan that complies with Subsection (3);

(ii) hold a public meeting to allow affected entities to examine the proposed annexation policy plan and to provide input on it;

(iii) provide notice of the public meeting under Subsection (2)(a)(ii) to each affected entity at least 14 days before the meeting;

(iv) accept and consider any additional written comments from affected entities until 10 days after the public meeting under Subsection (2)(a)(ii);

(v) before holding the public hearing required under Subsection (2)(a)(vi), make any modifications to the proposed annexation policy plan the planning commission considers appropriate, based on input provided at or within 10 days after the public meeting under Subsection (2)(a)(ii);

(vi) hold a public hearing on the proposed annexation policy plan;

(vii) provide reasonable public notice, including notice to each affected entity, of the public hearing required under Subsection (2)(a)(vi) at least 14 days before the date of the hearing;

(viii) make any modifications to the proposed annexation policy plan the planning commission considers appropriate, based on public input provided at the public hearing; and

(ix) submit the planning commission's recommended annexation policy plan to the municipal legislative body; and

(b) the municipal legislative body shall:

(i) hold a public hearing on the annexation policy plan recommended by the planning commission;

(ii) provide reasonable notice, including notice to each affected entity, of the public hearing at least 14 days before the date of the hearing;

(iii) after the public hearing under Subsection (2)(b)(ii), make any modifications to the recommended annexation policy plan that the legislative body considers appropriate; and

(iv) adopt the recommended annexation policy plan, with or without modifications.

(3) Each annexation policy plan shall include:

(a) a map of the expansion area which may include territory located outside the county in which the municipality is located;

(b) a statement of the specific criteria that will guide the municipality's decision whether or not to grant future annexation petitions, addressing matters relevant to those criteria including:

(i) the character of the community;

(ii) the need for municipal services in developed and undeveloped unincorporated areas;

(iii) the municipality's plans for extension of municipal services;

(iv) how the services will be financed;

(v) an estimate of the tax consequences to residents both currently within the municipal boundaries and in the expansion area; and

(vi) the interests of all affected entities;

(c) justification for excluding from the expansion area any area containing urban development within 1/2 mile of the municipality's boundary; and

(d) a statement addressing any comments made by affected entities at or within 10 days after the public meeting under Subsection (2)(a)(ii).
(4) In developing, considering, and adopting an annexation policy plan, the planning commission and municipal legislative body shall:
(a) attempt to avoid gaps between or overlaps with the expansion areas of other municipalities;
(b) consider population growth projections for the municipality and adjoining areas for the next 20 years;
(c) consider current and projected costs of infrastructure, urban services, and public facilities necessary:
(i) to facilitate full development of the area within the municipality; and
(ii) to expand the infrastructure, services, and facilities into the area being considered for inclusion in the expansion area;
(d) consider, in conjunction with the municipality's general plan, the need over the next 20 years for additional land suitable for residential, commercial, and industrial development;
(e) consider the reasons for including agricultural lands, forests, recreational areas, and wildlife management areas in the municipality; and
(f) be guided by the principles set forth in Subsection 10-2-403(5).
(5) Within 30 days after adopting an annexation policy plan, the municipal legislative body shall submit a copy of the plan to the legislative body of each county in which any of the municipality's expansion area is located.
(6) Nothing in this chapter may be construed to prohibit or restrict two or more municipalities in specified counties from negotiating and cooperating with respect to defining each municipality's expansion area under an annexation policy plan.

Heber City
Annexation Policy Plan

Adopted: September 4, 2018 by Ordinance 2018-42

Amended: July 6, 2021 by Ordinance 2021-21

Heber City Corporation

CONTENTS

Introduction 3
Expansion Area Map 4
Gaps and Overlaps 4
20 Year Population Projections 4
Current and Projected Costs of Infrastructure and Services 6
Need for Residential, Commercial, and Industrial Land 6
Reasons for Including Sensitive Lands in Expansion Area 9
Justification for Excluding Areas From Expansion Area Within ½ Mile of Current Boundary 9
Criteria for Considering Annexations 11
Conformance to Utah law and Legislative Policy 12
Conformance to City Council Policy 12
Character of the Community 14
The Need for Municipal Services in Developed and Undeveloped Unincorporated Areas 15
Sewer 15
Water 16
Pressurized Irrigation 17
Police and Animal Services 17
Justice Court. 18
Parks and Cemetery 18
Community Development Services 18
Public Works 18
Plans for Extension of Municipal Services 18
How Municipal Services will be Financed 20
Estimate of Tax Consequences to Residents Both Currently Within the City and in the Expansion Area 24
Interests of Affected Entities 25
Statements made by Affected Entities at April 27, 2017 public meeting 25

INTRODUCTION

In accordance with the provisions of 10-2-4, Utah Code Annotated, all municipalities within the State are required to adopt an Annexation Policy Plan. In this Annexation Policy Plan, cities are required to develop an expansion area map and plan for the future growth of the community for the next 20 years.

The Annexation Policy Plan is intended to guide decision making regarding future annexations. It also helps the City plan for future expansion in conjunction with neighboring political entities. Open communication between the City and other political entities, particularly the County, is a priority in the process of developing the Annexation Policy Plan.

Heber City adopted its first Annexation Policy Plan over a decade ago. In 2017, several property owners requested Heber City consider amending the expansion area map to include their properties. The process for adopting the amendment in 2017 illustrated the need for the City to dramatically overhaul its Annexation Policy Plan to incorporate informal policy into writing. Additionally, the City identified a need to update relevant portions of the General Plan that are out of date.

EXPANSION AREA MAP

As per Utah Code, Section 10-2-401.5 (4) and10-2-401.5 (3) (c), the City has considered the following six points in developing, considering, and adopting this Annexation Policy Plan as follows:

GAPS AND OVERLAPS

Heber City has attempted to avoid gaps between or overlaps with the expansion areas of other municipalities. However, overlaps do exist between Heber City and Charleston and between Heber City and Daniel Town.

Heber City has the municipal services that are necessary for industrial and retail development that both Charleston and Daniel Town lack. Heber City is desirous to attract industrial and retail development within its expansion area as designated on the General Plan and has therefore included these overlap areas within its Expansion Area Map. Additionally, these overlapping areas are near the Heber City Airport and/or are part of the HVSSD Sewer Fields, both of which Heber City has an interest in how they impact the City..

20 YEAR POPULATION PROJECTIONS

Heber City has considered population growth projections for the municipality and adjoining areas for the next 20 years. Population projections by Mountainland Association of Governments (MAG) show Heber City will grow from 15,723 persons in 2017 to 25,321 persons in 2037. The current 4.7% annual growth rate is projected to drop to 2.26% after 2021, and to 1.66% after 2031.

20 Year Population Projections

Year	Annual Growth Rate	Population	Population Change	Residential Units
2017	4.70%	15,723	706	211
2018	4.70%	16,462	739	221
2019	4.70%	17,236	774	231
2020	4.70%	18,046	810	242
2021	2.26%	18,454	408	122
2022	2.26%	18,871	417	124
2023	2.26%	19,297	426	127
2024	2.26%	19,733	436	130
2025	2.26%	20,179	446	133
2026	2.26%	20,635	456	136
2027	2.26%	21,102	466	139
2028	2.26%	21,579	477	142
2029	2.26%	22,066	488	146
2030	2.26%	22,565	499	149
2031	1.66%	22,939	375	112
2032	1.66%	23,320	381	114
2033	1.66%	23,707	387	116
2034	1.66%	24,101	394	117
2035	1.66%	24,501	400	119
2036	1.66%	24,908	407	121
2037	1.66%	25,321	413	123
	Total	**25,321**	**10,304**	**3076**

CURRENT AND PROJECTED COSTS OF INFRASTRUCTURE AND SERVICES

Heber City, the North Village Special Service District (NVSSD), the Jordanelle Special Service District (JSSD), and the Twin Creeks Special Service Districts (TCSSD) have adopted Capital Facilities Plans that consider current and projected costs of infrastructure, urban services, and public facilities necessary to facilitate full development of the area within their respective jurisdictions. These plans identify the necessary infrastructure, services, and facilities in the City's expansion area.

NEED FOR RESIDENTIAL, COMMERCIAL, AND INDUSTRIAL LAND

Heber City has considered, in conjunction with its General Plan, the need over the next 20 years for additional land suitable for residential, commercial, and industrial development. As shown in the table below, the City needs an additional 3,449 acres (5.39 square miles) to accommodate growth for the next 20 years, based on the growth rates projected for the City. This area consists of 378 acres of Commercial Land, 112 acres of Industrial Land, 645 acres of Public Land, 1936 acres of Residential Land, and 378 acres for Public Streets.

20 Year Land Needs

Land Use	2017 Area (sq. mi)	Additional 20 Year Land Need	Total 20 Year Land Need
Commercial	0.97 sq. mi. (11%)	0.59 sq. mi.	1.56 sq. mi.
Industrial	0.29 sq. mi. (3%)	0.16 sq. mi.	0.45 sq. mi.
Public	1.65 sq. mi. (19%)	1.01 sq. mi.	2.66 sq. mi.
Residential	4.95 sq. mi. (56%)	3.03 sq. mi.	7.98 sq. mi.
Public Streets	0.97 sq. mi. (11%)	0.59 sq. mi.	1.56 sq. mi.
Total	8.83 sq. mi.	5.38 sq. mi	14.21 sq. mi.

2017 Land Use Analysis

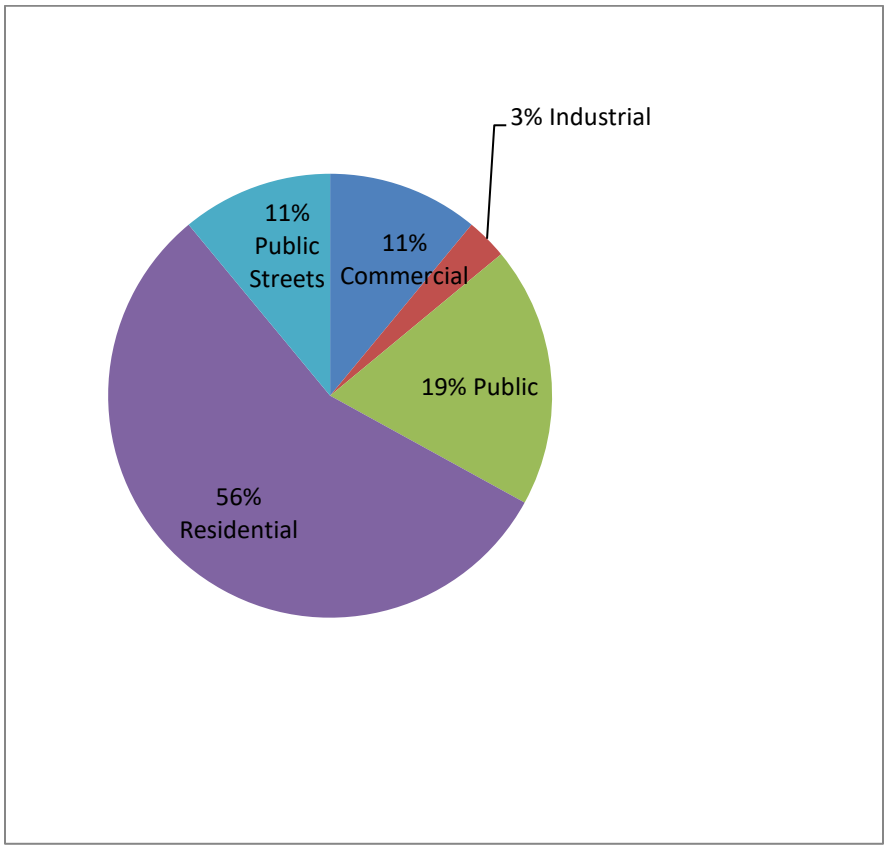

2017 Land Use Map Analysis

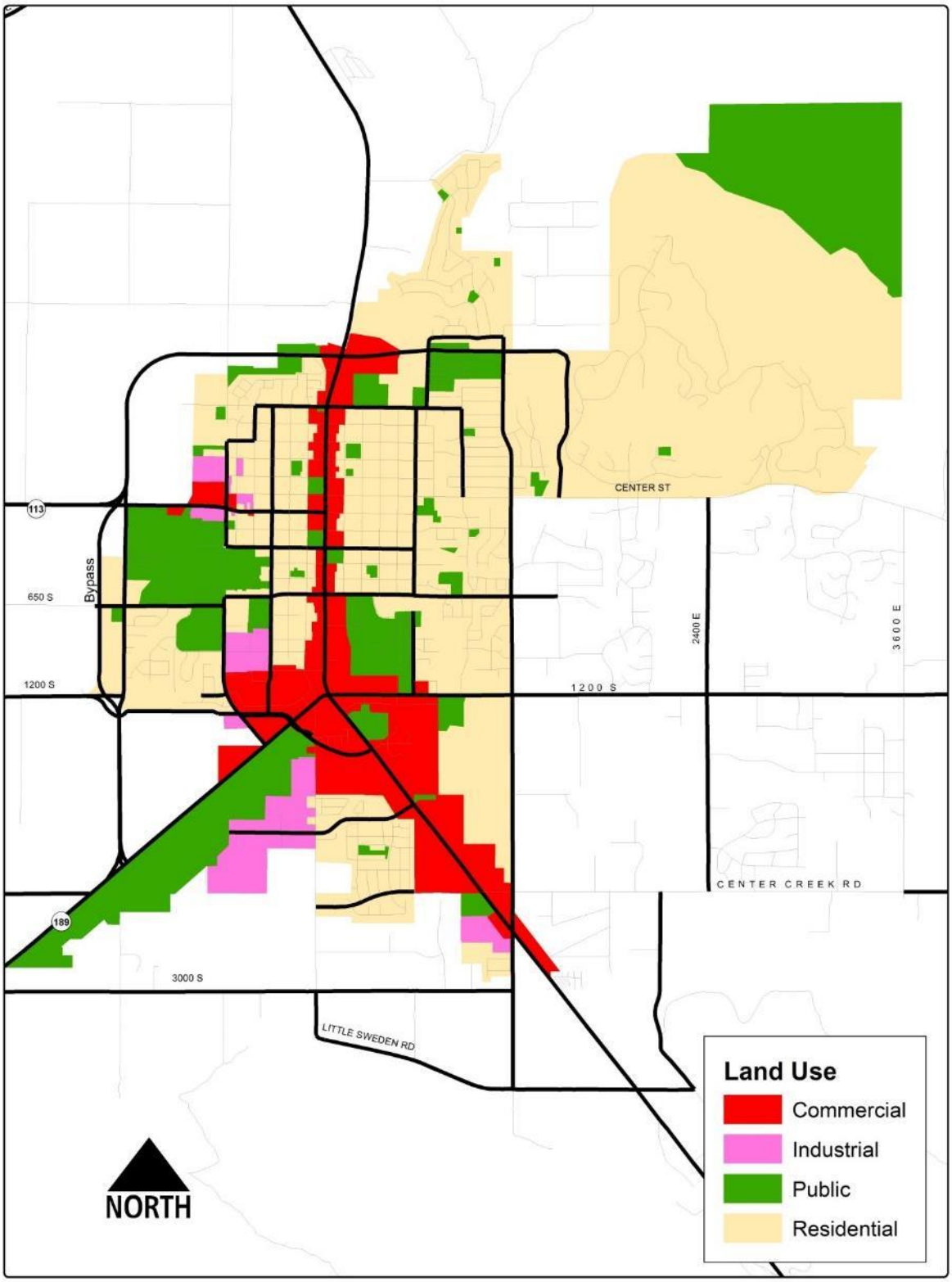

REASONS FOR INCLUDING SENSITIVE LANDS IN EXPANSION AREA

Heber City's expansion area includes some agricultural lands and forested areas. Recreational and wildlife management areas are not part of the City's expansion area.

The agricultural lands are located in the Twin Creeks area east of 1200 East. The City also included an agricultural area on the northwest corner of Heber City from current boundaries up to the future highway bypass because the bypass serves as the City boundary elsewhere. It is the intention of Heber City to maintain agricultural zoning or a conservation type subdivision development pattern in these areas that preserve agriculture and open space.

Forested areas are included within the City's expansion area. Wasatch County has zoning that permits higher density master planned communities in the forested area with open space requirements. Heber City envisions significant amounts of open space in that forested area with densities no more than that planned by Wasatch County. The Cooperative Wildlife Management Unit (CWMU) designation in the area will likely be dissolved, whether it is developed by Wasatch County or Heber City.

JUSTIFICATION FOR EXCLUDING AREAS FROM EXPANSION AREA WITHIN ½ MILE OF CURRENT BOUNDARY

North Fields

Consistent with the General Plan, Heber City will not annex properties in the North Fields. It is the intent of Heber City to promote the North Fields to remain as an agricultural area, and the City opposes the extension of any municipal services into the area. The Expansion Area Map utilizes the future Main Street Bypass as the future north and northwest municipal boundary adjoining the North Fields. The City will only entertain annexations of property up to and including the bypass upon condition of dedication of the requisite right of way for the bypass according to current UDOT requirements. Additionally, annexation in that area should include efforts to preserve agriculture in the North Fields, such as Transfer of Development Rights, Purchase of Development Rights, Large Lot Agricultural Zoning, and/or Conservation Developments that preserve natural and agricultural areas.

South Fields

Heber City desires a separation between itself and other municipalities with agricultural and/or open lands. The City supports keeping the land west of that canal as low density agricultural lands, either in Charleston Town or within the unincorporated area. The City opposes expansion of municipal services west of the canal.

Twin Creeks Area

The area between 1200 East 2400 East serves as a suburban transition zone to the lower agricultural densities envisioned east of 2400 East. A significant part of that area is contained within a master planned subdivision, the Crossings at Lake Creek. It is unlikely there would be any interest in annexing that area, as it is already developed. South of 1200 South, some large lot agricultural subdivisions exist that should remain as agricultural lots. East of the City's expansion area should remain as an agricultural area, decreasing in density as one travels away from the City. Greener Hills Subdivision exists to the east of Red Ledges and this area should remain at a lower density, as it has been developed. Much of the area east of 1200 East and North of 1200 South has already been developed in the unincorporated County at suburban style densities, and much of the area is therefore unlikely to be annexed into the City.

Expansion Area Map

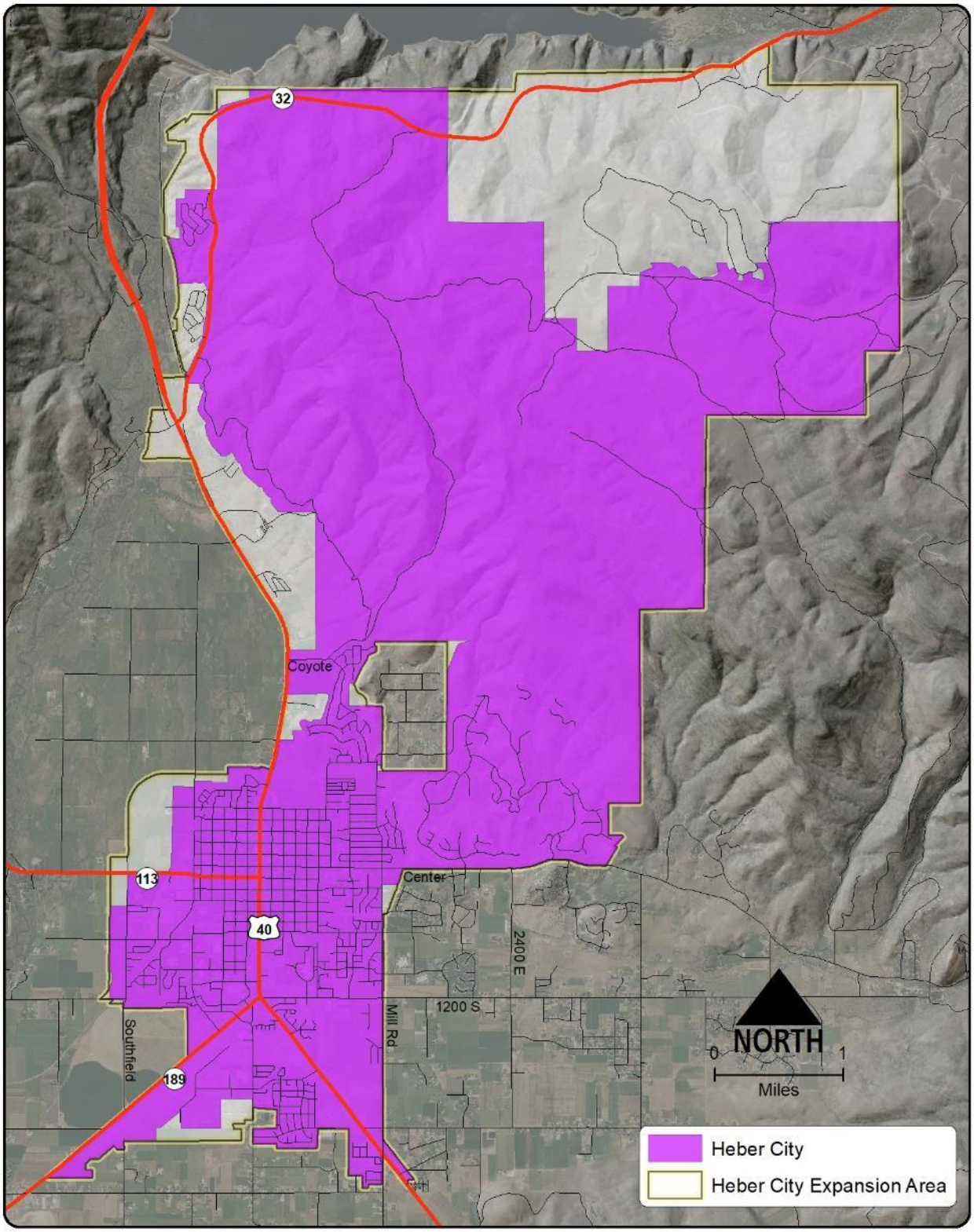

CRITERIA FOR CONSIDERING ANNEXATIONS

The policy of the City Council is to ensure that proposals to annex territory to the City are based on compliance with Utah law, the General Plan, and the development policies as may be amended from time to time by the Council. The following criteria will be used to evaluate annexation proposals:

CONFORMANCE TO UTAH LAW AND LEGISLATIVE POLICY

1. A petition is to be submitted requesting annexation meeting the requirements established by the State Legislature.
2. The territory proposed for annexation shall be contiguous to corporate boundaries of Heber City and be a contiguous area.
3. The territory proposed for annexation will not leave or create an unincorporated island or unincorporated peninsula except as provided by Utah Code Subsection 10-2-418 (3) or unless the County and City have otherwise agreed.
4. The plat of the territory shall be drawn by a surveyor licensed to practice in the State of Utah.
5. Action to approve, approve with modifications, or deny an annexation shall be made in conformance with the provisions of Utah Code Title 10, Part 4.
6. The Council may add or delete territory from the annexation proposal to remove islands or unincorporated peninsulas created by the annexation.

CONFORMANCE TO CITY COUNCIL POLICY

The City Council establishes policies to ensure that annexations are added to the City in a systematic pattern that provides for logical expansion of City boundaries. The City Council recognizes that the Legislature from time to time may enact laws that are contrary to established practice and such laws shall supersede Council policy if conflict exists. Policies of the City Council follow:

1. The Council may accept territory proposed for annexation when the petitioned lands are located within a Township in order to protect the City's future growth options and programs.
2. Annexed territory shall be assessed to ensure that boundaries follow ownership, topography, natural features, and other readily defined boundaries.
3. To ensure efficient street and utility maintenance, the annexed area shall, whenever possible, include both sides of a street.
4. Arterial and collector roads should remain within one community for as great a distance as possible to ensure efficient street layout, control, and maintenance.
5. All major streets shall be as defined by the Heber City General Plan and Transportation Master Plan.
6. If practicable and feasible, the boundaries of an area proposed for annexation shall be drawn:
    a. along the boundaries of existing local districts and special service districts for sewer, water, and other services, along the boundaries of school districts whose boundaries follow City boundaries or school districts adjacent to

school districts whose boundaries follow City boundaries, and along the boundaries of other taxing entities;

b. to eliminate islands and peninsulas of territory that is not receiving municipal-type services;
c. to facilitate the consolidation of overlapping functions of local government;
d. to promote the efficient delivery of services; and
e. to encourage the equitable distribution of community resources and obligations.

7. The annexation shall be in conformance with the provisions of the Annexation Policy and any future Annexation Elements of the General Plan and the Annexation Policy Plan and Capital Facilities Plan.
8. The Council shall consider the fiscal impacts of development within the territory proposed for annexation, including both the cost of delivering services and the revenue stream generated by new development.
9. For large Annexations that exceed 500 acres, the City will analyze the need for regional facilities such as parks, trails, fire stations, police stations etc., and will consider the need to request dedications from annexation petitioners.
10. Annexation petitioners shall provide the following information:
    a. Accurate map showing the territory as proposed for annexation. The Council may direct the Administration to require additional mapping information with submittal of petitions for annexation.
    b. The Council shall require that a feasibility report be prepared by City staff when time and resources are available with costs paid by petitioners, or be submitted by a consultant of the City with costs paid by petitioner for the following:
        i. Existing and proposed population density;
        ii. Geology, geography, and topography of the area and its surroundings;
        iii. Determination of islands or peninsulas remaining in the unincorporated area;
        iv. Fiscal impact of the proposed annexation on the unincorporated area, other municipalities, other government entities, special districts, and school district;
        v. Current and five year projections of demographic and economic base for the proposed annexation area and surrounding unincorporated area;
        vi. Projected five year growth for the proposed annexation area and surrounding unincorporated area;
        vii. Current and five year projections of the cost of government services for the proposed annexation area;
        viii. Present and five year projection of revenue to be received by the City resulting from the annexation; and
        ix. Projected tax impact the annexation will have for the next five years on affected property owners.
11. The Council shall require an annexation agreement be recorded with the annexation plat, outlining specific circumstances relating to services, transportation corridors, zoning, and other issues identified by the City during the annexation process.
12. The Planning Commission shall review and provide a recommendation on each annexation petition received by the City.
13. Each Petition for Annexation shall include a concept plan. What is required in the concept plan at the time of filing the Petition for Annexation is limited to the best

knowledge of the Petitioner at the time of said filing. This requirement to submit a concept plan with the petition, shall in no way limit or restrict changes, amendments, alterations or modifications to said concept plan throughout the annexation and development process as may be desired either by the Petitioner, Developer, Planning Commission or City Council.

14. Within Special Service Districts, the City could offer services or temporary services to areas that contain existing homes or in areas where it is infeasible for a Special Service District to provide sanitary water, sewer, or irrigation service. However, the City will need to carefully coordinate such effort with the district to ensure that financing for the district is not harmed by the City providing that service. It is generally understood that the primary utility provider for districts areas will be the districts.
15. Heber City prefers to not extend its services beyond its boundaries. The City Council may extend municipal services to the unincorporated areas if they find that such expansion is consistent with the overall Annexation Policy Plan and General Plan, will not present barriers for future annexation, and is acceptable to a Special Service District, if applicable. The petitioner will be charged an impact fee and be required to pay 1 1/2 times the monthly service fee. Additionally, the petitioner for services will be required to enter into an agreement to annex when the City reaches the property or to not oppose an annexation if one occurs.

CHARACTER OF THE COMMUNITY

Heber City is located about 45 miles from Salt Lake City, 20 miles from Park City and 27 miles from the Orem/Provo area. Heber is a high-amenity mountain valley community which provides an excellent location for individuals and families interested in an outdoor lifestyle surrounded by a scenic environment.

Heber City has been and will continue to be Heber Valley's center of commerce, industry, education, and government. The community has taken the initiative to provide the services for supportive land uses. In addition, the City has taken the lead in providing diversified housing to meet the needs of all people without regard for social or economic status. Housing development needs to be supported by adequate commercial and industrial development to allow a City revenue base that is broad and diverse. Future annexations should be considered from this perspective.

Agriculture and open spaces, especially on the community's periphery, are important community pursuits. Community separation that exists between communities is a tradition in Heber Valley. Heber City reserves the right to maintain agricultural land and/or open space between its self and other municipalities and to protect agricultural lands and lands containing natural hazards where it is in the best interest of the community. Annexations that can help preserve open space will be considered, as will annexations that can provide a developed setting that is consistent with community goals.

Heber City's development patterns are somewhat unique from smaller communities that are not part of a suburban environment but are separated from major population centers. It is important that Heber City take a long-range view, at least 20 years, at its potential for expansion. At the same time, growth needs to be in areas where the City can efficiently extend municipal services and discourage leap frog and rural sprawl development which increases the costs and places a higher tax burden on the citizens.

The City has adopted a General Plan with Land Use, Open Space, Parks, and Transportation elements. This Plan identifies and defines community and neighborhood character. Heber City is a City of neighborhoods, and newly annexed areas are to be developed to either mesh with established neighborhoods or to create new neighborhoods.

It is the policy of the City to avoid development of wetlands, steep-slope, critical environmental habitat areas, shrink-swell soils or any other environmental conditions that threaten the integrity of the City infrastructure unless, in an annexation agreement, the developer can show how they will mitigate these issues in conformance with the City Ordinances, Code and Federal and State Regulations.

THE NEED FOR MUNICIPAL SERVICES IN DEVELOPED AND UNDEVELOPED UNINCORPORATED AREAS

In the past, Heber City has had limited extension of urban services in the unincorporated areas. A fundamental policy is that if someone desires urban services, they must be annexed into the City. In most of the residential areas, urban services have been extended. In the commercial area along Highway 40, there has been a limited amount of municipal services provided; however, full service needs to eventually be extended as the areas further develop and annexed.

SEWER

The valley's sewer treatment is addressed through two means. The Heber Valley Special Service District (HVSSD) provides waste water treatment to Heber City and Midway City. Those facilities are located near Midway on the west side of the Provo River. The district treats water through both mechanical means and through application of treated water to the Sewer Fields located along the north side of Highway 189.

Currently HVSSD also provides treatment for waste water from the Twin Creeks Special Service District (TCSSD), Jordanelle Special Service District (JSSD), and the North Village Special Service District (NVSSD). In the long term, these three SSD's intend to move some or all of their waste water treatment needs to the JSSD waste water treatment facility that is located along the old Highway 40 route, south of the Jordanelle Dam. This facility provides all of its treatment through mechanical means.

The County established a minimum five acre lot size many years ago for lots on septic tanks to protect the ground water in the valley. Any new lot less than five acres requires connection to a central sanitary sewer system. The City anticipates that all new growth occurring within the City will require central sewer service. Outside the City, sewer service availability and necessity depends upon location.

For the North Fields, an undeveloped area, County zoning requires 20 acres per lot. There is not a need for sanitary sewer service in that area, and there are no plans for the City or County to provide sewer in that area. Heber City has provided a handful of sewer connections to lots outside of the City that front Midway Lane in the North Fields, as the lots were within 300 feet of the sewer outfall line. There are numerous lots of record in the

North Fields that are less than five acres in size that are near the City's sewer outfall line. The City should not provide additional sanitary sewer services to the North Fields area.

For the South Fields, an undeveloped area, County zoning requires 20 acre minimum lot sizes in part of the area and five acre minimum lot sizes near the western edge of the City. There is not a need for sewer services in the area. A few non-conforming lots and homes exist on lots that are smaller than five acres.

The Sewer Fields, north of the Highway 189, are currently undeveloped and the city wishes them to remain so to protect the rural environment, provide a buffer zone between the city and surrounding cities/ and support lower sewer rates. If the sewer fields are not needed in the future, the City should consider annexation of this area and provide sanitary sewer service to the area. On the south western portion of the City's annexation expansion area, there may be a need to provide sanitary sewer service.

East of Mill Road, the County has formed the Twin Creeks Special Service District to provide sanitary sewer service. The zoning in the unincorporated County in the area permits lots of 1 acre in size and larger. The area has a mixture of lot sizes and has some non-conforming lots less than five acres in size that are serviced with septic tanks and drain fields. Given availability of the Twin Creek's Special Service District (TCSSD) sewer system, Heber City will not need to provide sanitary sewer service for the area. The City is capable in servicing portions of the TCSSD. The City could offer service to areas that contain existing homes or in areas where it is infeasible for the TCSSD to provide sanitary sewer service. However, the City will need to carefully coordinate such effort with the TCSSD to ensure that financing for the district is not harmed by providing that service. It is generally understood that the primary sewer provider for this area will be the TCSSD.

North of Coyote Lane and north of existing City limits, Wasatch County has formed the North Village Special Service District (NVSSD), and Jordanelle Special Service District (JSSD) which will be capable of providing sanitary sewer service to the North Village and southern portion of the Jordanelle Planning Area. The area is planned to have densities that necessitate sanitary sewer service. Similar to the TCSSD area, the City is capable in servicing portions of the NVSSD. The City could offer services or temporary services to areas that contain existing homes or in areas where it is infeasible for the NVSSD to provide sanitary sewer service. However, the City will need to carefully coordinate such effort with the NVSSD to ensure that financing for the district is not harmed by the City providing that service. It is generally understood that the primary sanitary sewer provider for this area will be the NVSSD.

WATER

Residential Densities in the North Fields and South Fields are low enough that homes will not need access to a central water supply for culinary or fire protection uses. Most, if not all existing homes in the area are serviced with individual culinary wells. Heber City does not intend to provide, and opposes extension of culinary water into these areas.

The Sewer Fields are currently undeveloped and the city wishes them to remain so to protect the rural environment, provide a buffer zone between the city and surrounding cities, and support lower sewer rates. If the sewer fields are not needed in the future, the City should consider annexation of this area and provide central culinary water service to

the area. On the south western portion of the City's annexation expansion area, there may be a more urgent need to provide water for culinary and fire protection purposes.

The TCSSD, JSSD, and NVSSD provide culinary water to the Twin Creeks area east of Mill Road, and much of the area north of Coyote Lane and the current City limits. The residential densities in the Twin Creeks area are about 1 unit per acre and generally require central culinary water. In the NVSSD and JSSD, densities exceed one unit per acre, and can approach 20 to 30 units per acre, necessitating culinary water service as well. The City is capable in servicing portions of the NVSSD, TCCSSD, and JSSD, but the overall demand and topography exceeds the City's ability to provide water service. The City could offer water services or temporary services to areas that contain existing homes or in areas where it is infeasible for the districts to provide culinary water service. However, the City will need to carefully coordinate such effort with the districts to ensure that financing for the district is not harmed by the City providing that service. It is generally understood that the primary culinary water provider for these areas will be the NVSSD, TCSSD, and the JSSD.

PRESSURIZED IRRIGATION

Pressurized irrigation is offered by Heber City, Special Service Districts, and the Central Utah Project (CUP) in many areas of the City's expansion area and unincorporated areas. In the unincorporated areas, irrigation is provided by a combination of canals, ditches and pressurized irrigation. In the North Fields, South Fields, TCSSD, NVSSD, and JVSSD, it is anticipated the CUP and/or Special Service Districts will provide irrigation water services. Heber City has its own pressurized irrigation system that relies on CUP facilities for access to irrigation water. Heber City will not offer irrigation services outside of its boundaries. As properties are annexed into the City, Heber City anticipates offering PI to properties as they develop, or having the Special Service District provide that service if the district provides that service. Consultation with districts, canal companies and the CUP will be necessary to determine how irrigation service will be provided.

POLICE AND ANIMAL SERVICES

Heber City has a Police Department that is responsible for police protection within its borders. Given Heber City's central location in the valley, Heber City Police often serve as the first responder outside of Heber City limits, particularly to higher density housing in the North Village and to commercial areas along Highway 40.

Heber City is unique in that many tourists pass through the City as they are enroute to nearby tourist destinations such as Strawberry Reservoir, Jordanelle Reservoir, Wasatch Mountain State Park, and Park City Ski Resorts. The primary transportation route from areas along the Wasatch Front to these destinations is Highway 40, which passes right through the middle of the City, and Heber City receives the tax benefits, as well as the crime and traffic that accompany the tourist visits.

Animal Services is provided by the Police Department. The Police Department also oversees various volunteer organizations such as CERT and VIPS that assist with emergency management and event management.

JUSTICE COURT.

Heber City provides a Justice Court that serves the needs for civil cases and non-felony crimes. Increases in population in and around the City, as well as increases to tourism in the valley, impact the Justice Court similar to the Police Department.

PARKS AND CEMETERY

Heber City's Parks and Cemetery Department provides maintenance services to City owned neighborhood parks, trails, cemetery, City buildings and grounds, downtown trees and planter strips, entrance features and other open spaces. Access to these facilities is open to the public, including residents of the unincorporated area. Heber City has a policy requiring at least 1.5 acres for any new City owned park. The City collects impact fees for parks and trails, based upon the Parks and Trails Component of the Heber City Capital Facilities Plan. As properties are annexed, the City should analyze the need for neighborhood parks in those areas, as well as the potential need for privately owned parks.

COMMUNITY DEVELOPMENT SERVICES

Heber City provides planning services through the staff of the Planning Department. The Building Department provides inspection to ensure compliance of all construction with the adopted International Building Code. The City's Engineer ensures compliance of new development with City Standards and Specifications.

PUBLIC WORKS

Heber City Public Works has responsibility for flood control, street, water, sewer, irrigation, storm drainage, street plowing and ditch and canal maintenance, excluding JSSD and NVSSD infrastructure.

PLANS FOR EXTENSION OF MUNICIPAL SERVICES

The plan for extension of municipal services is represented in the General Plan and the Capital Facilities Plan. This policy document is developed around the General Plan's Land Use Map. An important component of this extension of municipal services is the ability of the City to effectively serve these areas; therefore, development should be consistent with the General Plan, notwithstanding it may be amended from time to time. The Capital Facilities Plan is comprehensive in its analysis of utility needs, extension and financing of those facilities; therefore, a brief summary of its philosophy will suffice for the Annexation Policy Plan.

The City requires development to construct and dedicate all new public facilities needed for a new development. Heber City collects impact fees that upsize sewer, water, irrigation, and street facilities to meet the needs of development. As a condition of annexation, developments may be required to extend streets, water and sewer, and other vital public facilities consistent with the Heber City Public Facilities Master Plan. It is the policy of Heber City to extend a high quality of municipal services delivered efficiently

throughout the City, including areas of annexation. Such services may be provided directly by Heber City, through inter-local cooperative service agreements, or through creation of such special improvement districts as determined by Heber City to be in the best public interest of its citizens.

For areas located within a special service district, Heber City will rely upon the district to provide water, sewer, and irrigation services. The districts extend services when the services are needed or requested and do so in different ways. Developers often extend services, though the district has extended services as well.

Special Service District Locations

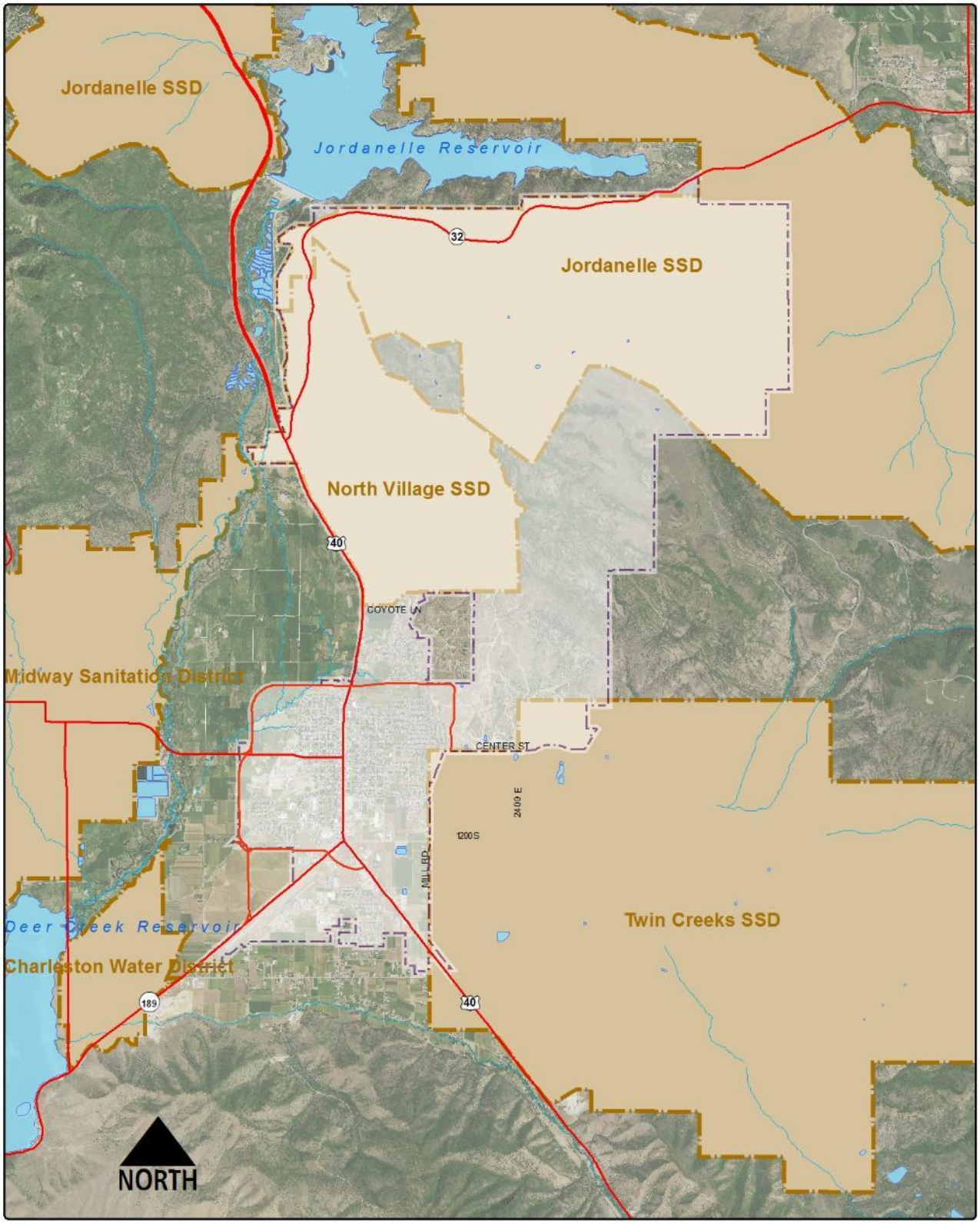

HOW MUNICIPAL SERVICES WILL BE FINANCED

Financing of services in the expansion area will be accomplished in the same manner as financing of infrastructure and services within the corporate limits. Infrastructure needed to service developed properties is installed at the expense of developers. Upon dedication to, and acceptance of the infrastructure by the City, maintenance is provided by the City with costs of operation and maintenance offset by a combination of property tax and sales tax revenues, class B and C road funds, and utility franchise fees. In addition the City will impose impact fees to offset the impact of offsite infrastructure systems needed for new development.

Heber City has adopted a Capital Facilities Plan that addresses future services for parks, trails, sewer, water, irrigation, and streets. The document identifies services that need to be addressed in order to accommodate growth areas at a level of service provided to current residents. This document serves as the basis for determining impact fee amounts and also the location and size of planned facilities such as streets, water, sewer and parks and trails. The Capital Facilities Plan is comprehensive in its analysis of utility needs and financing of those facilities; therefore, a brief summary of its philosophy will suffice for this Annexation Policy Plan.

New development is required to install the base sized facilities needed for their development. Impact fees are then used to upsize some of those facilities to accommodate new growth and development.

Upon an annexation petition, the City may require a developer to install offsite facilities as a condition of annexation. When a developer installs an offsite facility such as a road, waterline, or sewer line, the City, at the request of the developer, can put reimbursement agreements in place so that future development that benefits from those new services must pay their proportionate share back to the original developer.

The City requires all new development to provide water rights of the type and quantity as determined by the State Engineer that can be utilized for the City's culinary water supply and secondary irrigation system. Water rights are required to be conveyed to the City (or applicable Special Service District) prior to recording a subdivision plat, or prior to approval of a non-residential or multi-family residential building permit.

Another financing mechanism available to the City is the creation of a Special Improvement District or the creation of an Economic Development Area. The City should consider these options when a proposed development furthers the economic development or transportation goals of the City's General Plan, but these mechanisms should be used sparingly. A potential consideration could be an SID for 500 East between 1200 South and Highway 40, which provides a necessary transportation link in the City, but where the cooperation of several property owners is necessary to see that street constructed.

The Twin Creeks Special Service District, North Village Special Service District, and the Jordanelle Special Service District have plans for servicing their respective areas, separate from Heber City's water, irrigation, and sewer plans. The districts have adopted capital facility plans that specify necessary infrastructure to accommodate growth. The districts collect impact fees based on those plans to help pay for future infrastructure.

These impact fees are used to oversize facilities for future growth as well as pay for the extension of necessary infrastructure.

The districts have financed and extended infrastructure in various ways. In the past assessments on various properties were used to finance infrastructure. Currently the district relies more on impact fees. Developers usually install and dedicate the required infrastructure to the Special Service District, and the district can reimburse developers or put reimbursement agreements in place. Once constructed, the county Special Service Districts will operate and maintain such dedicated infrastructure. Developers can also prepay impact fees to move a planned Capital Facility Project forward sooner to accommodate a proposed development. If an area within a Special Service District is developed in the City, Heber City will need to ensure that impact fees are collected by the district prior to issuing a permit.

The Special Service Districts have limited capacities. Any development proposed within the City, within those respective districts, should closely consult with the SSDs to ensure service availability and available capacity to provide services. New developments should have a density near those planned for in the unincorporated area.

Between the three Special Service Districts, several different water rights may be used. The water rights and system is complex, and Wasatch County has established a Water Board to review water related issues for proposed developments. Wasatch County's water right process differs from Heber City's process in that the Water Board must review all developments prior to the developments receiving entitlements (see figure below). Heber City should establish a policy whereby City development located within a Special Service District should comply with established County Water Board processes. The City should consider requiring annexation petitioners to complete the first steps during the annexation process so the City can place conditions of annexation within an annexation agreement.

The Special Service Districts have differing definitions of Equivalent Residential Units (ERUs) for sewer versus water. Water right requirements vary between the various districts. Differences may exist between district and City water right and ERU definitions.

Wasatch County Water Board Process for Development

Development Path		
COUNTY	**DEVELOPER**	**DISTRICT**
	→	1. "Water Supply" Review
	→	2. Feasibility Letter (not a will serve letter)
3. Development Water Review Panel (Action Plan) Chapter 10.01	←	
4. Master Plan Chapter 16	←	
	→	5. Draft Will Serve Letter
6. Preliminary Approval	←	
	→	7. Source, Delivery, Treatment, Storage - **Development Agreement** - Applicable Fees and Associated Costs - Account Current = Proceed - Not Current = Stop
	→	8. Will Serve Letter
9. Final Approval	←	

ESTIMATE OF TAX CONSEQUENCES TO RESIDENTS BOTH CURRENTLY WITHIN THE CITY AND IN THE EXPANSION AREA

Annexing into any municipality will increase the tax liability for property owners. Table 1 below illustrates the tax implications for primary homes, secondary homes, and businesses. Current state law levies taxes on the full property value for secondary homes and non-residential land. Property taxes on primary homes are levied against 55% of the assessed value. The added annual tax for the owner of a primary home in the City valued at $300,000 would be $220.28. The added annual tax for a business in the City valued at $500,000 would be $667.50.

Property Tax Consequences (2016)

Type	Value	Unincorporated Tax Amount (1.1460%)	Incorporated Tax Amount (1.2795%)	Difference
Primary Dwelling	$300,000	$1,890.90	$2,111.18	$220.28
Business or Secondary Dwelling	$500,000	$5,730	$6,397.50	$667.50

Heber City does not intend to raise property taxes for the City as a result of annexation of any specific properties within the proposed annexation area. In considering proposed annexations, Heber City will assess the existing capacity of services, along with the additional demand for services that will be required of the City as a result of the annexation. Additional service demands from unincorporated areas will be weighed against potential revenues and other benefits that can be expected to accrue to the City as a result of the proposed annexation. The potential revenue and benefits may include 1) Property tax; 2) Sales tax; 3) Utility hookup fees; 4) Utility Franchise Fees; 5) Impact fees; and 6) exaction or related fees based on rough proportionality to city and county costs; 7) Intangible benefits that accomplish a stated goal of the General Plan or other City planning document. The City Council will weigh these factors in determining whether or not to grant a petition for annexation.

INTERESTS OF AFFECTED ENTITIES

The affected entities are municipalities, the school district, special service districts and County government. It is important that the affected entities be involved during the annexation process

The school district should coordinate their future development and facility needs consistent with the growth plans for the City. The County should have growth policies that reinforce and are complementary to the City's growth policies so that a cooperative and coordinated development within the County and City occur.

The effect of annexation on the tax base of the County will be either neutral or positive. Annexed properties will continue to pay Wasatch County property tax assessments. It is likely that the value of these properties will increase when improved by municipal services resulting in a net increase in tax revenue to Wasatch County. Wasatch County also benefits from annexations by reduced cost of service to annexed properties.

The Wasatch County School District serves the entire County and benefits from annexation by receiving additional tax revenue as property values increase. New residential development obligates the District to educate new students. New commercial and industrial development will be a windfall increase in tax revenue to the District.

Heber Light & Power (HLP) is not an affected entity, but is impacted by Heber City annexations. HLP is required to provide power service within Heber City Limits. If an annexation includes customers being served by another power provider, Utah law would require HLP to reimburse the other power provider "for the value of each facility used to serve each electric customer within the annexed area . . .[and] dedicated to provide service to the annexed area." *Utah Code Ann*. §10-2-421(2). The "value" or purchase price is based on data and costs provided to HLP by the other power provider. The annexation agreement shall provide: (1) that the parties seeking annexation shall pay HLP for its cost of acquiring the other provider's facilities required to serve the customers in the annexed area and (2) that these costs not be borne by Heber City and its residents or by HLP and its customers.

STATEMENTS MADE BY AFFECTED ENTITIES AT APRIL 27, 2017 PUBLIC MEETING

On April 27, 2017, the Heber City Planning Commission hosted a public meeting with Affected Entities to receive comments on the proposed amendment to the City's Annexation Policy Plan. Ron Phillips, Director of the Special Service Districts, submitted a letter listing the concerns of the SSDs in relation to the City's potential adoption of an amended expansion that includes portions of the SSDs, shown below.

Subsequent to that meeting, Heber City and Wasatch County discussed various issues additional concerns pertaining to services, utilities, transportation and zoning that have illustrated the need to update the plan and the General Plan.

Special Service District Written Concerns (page 1 of 3)

Jordanelle Special Service District
P.O. Box 519
Heber City, UT 84032
OFFICE: (435) 654-9233
FAX: (435) 657-9582

May 8, 2017

Heber City Planning Commission
Attn: Keith Rawlings, Chairman
75 North Main Street
Heber City, UT 84032

RE: Comments on the Proposed Heber City Annexation Policy Plan

Mr. Rawlings:

Thank you for the opportunity to provide comments on Heber City's proposed amendment to its Annexation Policy Plan (the "Annexation Plan"). The Wasatch County Council, acting as the Governing Board of the Jordanelle Special Service District ("JSSD"), the North Village Special Service District ("NVSSD"), and the Twin Creeks Special Service District ("TCSSD"), has asked me to submit these comments as the Annexation Plan includes land within the existing boundaries of JSSD, NVSSD, and TCSSD. JSSD, NVSSD, and TCSSD are separate legal entities, but are managed in coordination with each other, sharing costs of staff and overhead to provide greater efficiency to the public. I serve as the General Manager of the three Districts, and submit these comments on behalf of the Governing Board each of the three Districts.

As an initial matter, it is important to comment on what is ***not*** in the Annexation Plan posted for public review in advance of the April 27, 2017 Planning Commission meeting. Utah law requires that each annexation policy plan include the following, along with a map of the expansion area:

- A statement of the specific criteria that will guide future decisions on annexation petitions, addressing:
  - The character of the community;
  - The need for municipal services in undeveloped and developed unincorporated areas;
  - The municipality's plans for extension of municipal services;
  - How the services will be financed;
  - An estimate of the tax consequences to residents already within the municipal boundaries and in the expansion area;
  - The interests of all affected entities, such as special service districts; and
- A justification for excluding from the expansion areas containing urban development within ½ mile of the municipality's boundary

Wasatch County's SSD Written Concerns (page 2 of 3)

As far as the Districts can tell from documents posted for public review, the Annexation Plan consists of an old Annexation Policy Plan, dated June 1, 2006 (the "2006 Plan"), coupled with a new map (the "2017 Map"). The 2006 Plan contains only very generalized statements regarding the criteria listed above, which do not provide the Districts — or the general public — with enough information to assess the ramifications of annexation of unincorporated areas. As just one example, in addressing the tax consequences of annexation for current and future residents, the 2006 Plan simply states that: "It is anticipated that areas annexed into the City will increase in value, and the tax assessment on newly developed areas, along with impact fees, development fees, and additional revenue assessments will generate revenue to help support the new services." 2006 Plan, at p. 7. The Districts find this statement to be unhelpfully vague. If revenues from annexed areas merely "*help* support" the new services, will current residents of Heber City need to fund the balance of the cost of services? Furthermore, it is not clear why the City believes that land will automatically increase in value upon annexation into the City, especially when the land already has access to water and sewer services from the Districts. In short, the Districts do not believe the general statements in the 2006 Plan — which are now over a decade out of date — adequately address the specific criteria required by Utah law.

Moreover, the 2017 Map encompasses large swaths of additional land that were not considered by the 2006 Plan. Nothing in the 2006 Plan addresses the factors listed above with respect to the area encompassed by the 2017 Map, which contemplates annexing areas far removed from the City's existing infrastructure, and already served by infrastructure owned and operated by the Districts. For instance, NVSSD owns extensive culinary water infrastructure in the proposed annexation area, as well as extensive water rights necessary to serve those areas. The City's Annexation Plan does not even acknowledge these facts, let alone explain why it is necessary or prudent, in the City's view, to annex areas that already have access to municipal services. The District believes that the City must address the factors listed above as they apply to the new areas proposed to be included in the new expansion areas.

In addition, Utah law requires the City to consider the following:

- Population growth projections for the city and adjoining areas for the next 20 years;
- Current and projected costs of infrastructure, urban services, and public facilities necessary to facilitate full development within the city and to expand infrastructure, services, and facilities into the expansion area;
- The need for additional land over the next 20 years for additional land for residential, commercial, and industrial development;
- The reasons for including agricultural lands, forests, recreational lands, and wildlife management areas in the municipality;

Again, the Annexation Plan put forward by Heber City consists solely of the 2017 Map showing new areas eligible for annexation, coupled with the 2006 Plan. Both the 2017 Map and the 2006 Plan are completely silent as to the four factors listed above. There are no population growth projections, no projected costs of infrastructure, and no explanation why the City needs the vast amount of land encompassed by the 2017 Map.

Wasatch County's SSD Written Concerns (page 3 of 3)

Finally, Utah law requires the Planning Commission to be guided by certain factors as it develops, considers, and adopts an annexation policy plan. Specifically, if practical and feasible, the boundaries of areas proposed for annexation must be drawn:

- Along the boundaries of existing special service districts;
- To eliminate islands and peninsulas of territory that are not receiving municipal-type services;
- To facilitate the consolidation of overlapping functions of local government;
- To promote the efficient delivery of services; and
- To encourage the equitable distribution of community resources and obligations.

The Annexation Plan is again silent on all of these matters. There is no explanation as to why it is not practical or feasible to draw the annexation area along the boundaries of the three Districts, rather than swallowing up large portions of all three. There is no analysis as to how annexing the areas within the expansion area will promote efficient delivery of services. Nor is there any discussion of how the City intends to encourage the equitable distribution of community resources and obligations.

Given all these omissions, the Districts object to the adoption of the Annexation Plan in its current form. Moreover, even if the City amends the Annexation Plan to address the omissions described above, the Districts are fundamentally concerned about annexation of any land within their defined service areas. The Districts acquired water rights and designed infrastructure based on anticipated densities in unincorporated areas. If the City annexes areas within the Districts' service areas and increases allowable densities, the Districts may not have enough water to serve the new residents, and existing infrastructure may not have the required capacities.

Finally, the TCSSD specifically objects to the annexation of areas east of Mill Road and the Wasatch/Humbug Canal. As Heber City staff acknowledged at the April 27, 2017 Planning Commission meeting, there has been a "gentlemen's agreement" between the City and Wasatch County that the City would not annex that area. TCSSD requests that the City honor that agreement and remove that area from its annexation expansion area.

Sincerely,

Ron Phillips

Ron Phillips
General Manager of JSSD, NVSSD, and TCSSD

cc: Mayor Alan McDonald
Mark Anderson, City Manager

Responses to Special Service District May 8, 2017 Letter

Concern	Response
The draft Annexation Policy Plan lacks detail for the 8 points required by Utah Code, Section 10-2-401.5 (3)	The text of the draft Annexation Policy Plan has been modified to specifically address the required 8 points of Utah State Code, Section 10-2-401.5 (3) (b), and the 5 points of Utah State Code, Section 10-2-401.5 (4).
The draft Annexation Policy Plan lacks detail for the 5 points required by Utah Code, Section 10-2-401.5 (4)	
Why don't the annexation boundaries follow SSD Lines?	The map has been modified to follow JSSD and TCSSD boundaries.
The Districts are fundamentally concerned about annexation of any land within their defined service area. If the City annexes areas…and increases densities, the Districts may not have….capacities.	It is the intent of the City to establish land uses in the General Plan that have densities no more than envisioned by Wasatch County within the district areas so district capacity will not be an issue. A General Plan Amendment to the Land Use Plan will be adopted in conjunction with the Annexation Policy Plan that solidifies this commitment.
TCSSD…objects to the annexation of areas east of Mill Road and the Wasatch/Humbug Canal.	The area east of Mill Road has been removed from the expansion area map.
Utah law requires the [City] to be guided by certain factors…..the Annexation Plan is silent on all of these matters.	The Annexation Policy Plan incorporated the guidance of Utah Code, Section 10-2-403 (6) into the Annexation Policy Plan.
Why is it…necessary and prudent to annex areas that already have municipal services?	By state statute, the City as a normal course of business cannot annex properties on its own, annexations occur through petition of private property owners. The expansion area gives property owners the choice of services between Heber City or Wasatch County.

Effective 5/14/2019

10-9a-102 Purposes -- General land use authority.

(1) The purposes of this chapter are to:
- (a) provide for the health, safety, and welfare;
- (b) promote the prosperity;
- (c) improve the morals, peace, good order, comfort, convenience, and aesthetics of each municipality and each municipality's present and future inhabitants and businesses;
- (d) protect the tax base;
- (e) secure economy in governmental expenditures;
- (f) foster the state's agricultural and other industries;
- (g) protect both urban and nonurban development;
- (h) protect and ensure access to sunlight for solar energy devices;
- (i) provide fundamental fairness in land use regulation;
- (j) facilitate orderly growth and allow growth in a variety of housing types; and
- (k) protect property values.

(2) To accomplish the purposes of this chapter, a municipality may enact all ordinances, resolutions, and rules and may enter into other forms of land use controls and development agreements that the municipality considers necessary or appropriate for the use and development of land within the municipality, including ordinances, resolutions, rules, restrictive covenants, easements, and development agreements governing:
- (a) uses;
- (b) density;
- (c) open spaces;
- (d) structures;
- (e) buildings;
- (f) energy efficiency;
- (g) light and air;
- (h) air quality;
- (i) transportation and public or alternative transportation;
- (j) infrastructure;
- (k) street and building orientation;
- (l) width requirements;
- (m) public facilities;
- (n) fundamental fairness in land use regulation; and
- (o) considerations of surrounding land uses to balance the foregoing purposes with a landowner's private property interests and associated statutory and constitutional protections.

(3)
- (a) Any ordinance, resolution, or rule enacted by a municipality pursuant to its authority under this chapter shall comply with the state's exclusive jurisdiction to regulate oil and gas activity, as described in Section 40-6-2.5.
- (b) A municipality may enact an ordinance, resolution, or rule that regulates surface activity incident to an oil and gas activity if the municipality demonstrates that the regulation:
  - (i) is necessary for the purposes of this chapter;
  - (ii) does not effectively or unduly limit, ban, or prohibit an oil and gas activity; and
  - (iii) does not interfere with the state's exclusive jurisdiction to regulate oil and gas activity, as described in Section 40-6-2.5.

Amended by Chapter 384, 2019 General Session

HEBER CITY PLANNING COMMISSION BYLAWS

May 8, 2008

Article 1:

Authority

These rules and procedures are adopted pursuant to Section 10-9-202 (2a), of the Utah State Code, and 18.12.180, and 2.48 of the Heber City Code.

Article 2:

Jurisdiction

The physical jurisdiction of the Planning Commission is the Heber City Limits.

Article 3:

Appointment and Terms of Members

A. The Planning Commission shall consist of seven (7) regular members and one (1) alternate member.

B. Planning Commission members shall be residents of Heber City.

C. The terms of office for Planning Commission members shall be six (6) years.

D. Improper conduct and non-performance of duties shall result in removal for cause as stated in 2.48.020. Members may be removed after a public hearing, by a majority vote of the City Council.

Article 4:

Planning Commission Officers and their Duties

A. Chairperson

1. The Planning Commission shall elect a Chairperson and a Vice-Chairperson from among its members at the first regular meeting in January.

2. The Chairperson and Vice-Chairperson shall serve for a term of two (2) years, beginning the first regular meeting in February, and may be re-elected.

3. The Chairperson shall preserve order, and decide all points of order, subject to appeal of the membership. Such an appeal shall be decided by a majority vote of the members present. The Chairperson may vote on all matters before the Planning Commission.

    a. The Chairperson with the concurrence of a majority vote of the Planning Commission may create such special subcommittees as he/she may, from time-to-time, deem necessary or desirable.

b. The Chairperson or Vice-Chairperson shall sign all final plats and transmittals to the City Council.

c. In the event of absence or disability the Chairperson, the Vice-Chairperson shall preside. In the absence of both, the members shall appoint a Chairperson for that meeting.

4. The Chairperson shall sign all documents of the Planning Commission that require a signature.

B. Vice-Chairperson

1. Perform all of the above duties in the absence of the Chairperson;
2. Conduct the annual review of the Planning Commission actions;
3. Coordinate and conduct the annual meeting of the Commission; and
4. Provide orientation to new Planning Commission members.

C. Secretary

1. Assure true construction and maintenance of the public record, record the proceedings of all hearings and meetings; and prepare the minutes of the Commission.

   a. Minutes shall include:

      i. Findings or conclusions;

      ii. Ordinance used as basis for decision;

      iii. Motions made, seconded, voting, abstentions, reasons for.

D. Chairperson Pro-Tempore

In extraordinary cases, where both the Chairperson and Vice-Chairperson are absent from a meeting or hearing, the remainder of the Commission shall elect a Chairperson Pro-Tempore by majority vote.

Article 5:

Staff of the Commission and their Duties

A. Planning Staff

1. Shall advise the Planning Commission or Municipal Council, and Chief Administrative Officers regarding Planning, regulation of development, development and re-development.
2. Shall prepare all documents for presentation to the Planning Commission; and;
3. Assist the Chairperson and Vice-Chairperson of the Commission in the exercise of their duties.
4. All recommendations to the City Council, where necessary, shall be submitted by the Staff to the City Attorney for review. Once reviewed

shall be returned to the Chairperson for verification before submittal to the City Council.

B. Legal Counsel

The City Attorney or his designee shall be the legal counsel for the Planning Commission and its committees.

Article 6:

Meetings

A. The Planning Commission shall meet as set forth in the annual notice of meeting schedule to conduct its duly appointed business.

B. A special meeting for any purpose may be held on the call of the Chairperson or of four (4) members of the Planning Commission. Commission members and public shall be notified of such meetings by the Secretary, in accordance with the provision of City and State law.

C. A quorum of the Planning Commission shall consist of four (4) voting members. A quorum shall be necessary to conduct business.

1. Any agenda item must receive a majority of votes for approval or recommendation to City Council for approval.
2. A failure to vote by a member shall be counted as an abstention.
3. In the case of a tie, the alternate shall break the tie.
4. In case of a tie vote the item may be continued.

D. The Planning Commission Secretary shall prepare and deliver or mail an agenda to all necessary parties at least six (6) days prior to each Planning Commission meeting. No material received after this time will be considered unless approved for consideration by the Chairperson.

E. Order of Business for Regular Meetings

1. Call to order and determination of quorum
2. Approval of the minutes of the previous meeting
3. Announcements
4. Old Business
    a. Matters regarding the comprehensive plan;
    b. Matters regarding capital improvements;
    c. Matters related to the subdivision of land;
    d. Matters related to the zoning ordinance;
    e. Matters related to other regulatory devices.
5. New Business
    a. Matters regarding the comprehensive plan;

b. Matters regarding capital improvements;

c. Matters related to the subdivision of land;

d. Matters related to the zoning ordinance;

e. Matters related to other regulatory devices.

6. Other Business
7. Review of the Planning Commission Calendar
8. Adjournment or Recess at call of Chairperson

Article 7:

Participation by Staff and Public

A. No person shall be permitted to speak unless recognized by the Chairperson, who shall designate time limits to persons permitted to speak on any matter properly before the Commission. Each person speaking before the Planning Commission shall first state his name, address and then the substance of his remarks.

B. Matters before the Planning Commission shall be presented in the following manner:

1. Presentation by staff;
2. Presentation by applicant;
3. Comments from the public, where appropriate, (decided by the Chairperson);
4. Comment and questions from the Planning Commission;
5. Further comments by applicant and public; and
6. Concluding comments from the staff.

Article 8:

Form and Character of Motions

The Planning Commission observes Roberts Rules of Order.

1. Upon review of the public record on a request and due deliberation among the members of the Planning Commission, any member of the Commission, except; the Chairperson, may make a motion. The motion shall include not only the direction of the motion (approval, approval with conditions, or denial), but also a recitation of the specific findings and conclusions supporting such motion.
2. A second shall be required for each motion.
3. A motion shall die in absence of a second.
4. Discussion and amendments on the motion.

5. Where a motion to deny a request has been defeated, a member of the Commission initially in opposition shall make a motion to:
    a. Approve the request;
    b. To table, or
    c. To continue the matter for further study or investigation.

Article 9:

Requirements for the Submission of Requests

A. The Planning Commission shall adopt standard forms for the submission of requests. All requests shall have reasonable advance time requirements;

B. The Planning Staff shall certify completeness of requests;

C. Any request denied shall not be resubmitted for a period of six (6) months; and

D. The Planning Commission may recommend to the City Council a fee schedule for the submission of requests to cover processing, duplication, and distribution of requests and related documents.

Article 10:

Documents of the Commission

A. Any and all materials submitted to the Planning Commission regarding a request shall be entered into the public record by a motion to "accept for the record".

B. All notices, agendas, requests, agency or consultant letters or reports, staff reports, minutes of meetings, and resolutions or record shall constitute the documents of the Planning Commission and shall be indexed as public record.

Article 11:

Administrative Calendar

A. Notice for all public hearings, work sessions and regular meetings shall conform to requirements of law.

B. Regular meeting schedule for the calendar year following shall be determined at the annual meeting of the Planning Commission.

C. The Planning Commission shall have an annual public meeting, to review the work of the previous year and plan the work program for the coming year.

Article 12:

Conduct of Members of the Planning Commission

A. Members of the Planning Commission shall prepare themselves for hearings and meetings.

B. An appointed member of the Planning Commission absent from three (3) consecutive regular meetings or four (4) regular meetings within a calendar

year without being excused by the Chairperson may be removed from the Planning Commission for cause.

C. Any Planning Commission member not present at the time the first matter of business is opened shall be replaced by the alternate for that meeting. If the late member shows up for the meeting, that member becomes the alternate.

D. A Planning Commission member with a conflict of interest in a matter before the Commission must state that such a conflict of interest exists and withdraw from participation in the public hearing, work session, or regular meeting on such matter. Participation of a member of the Planning Commission with a conflict of interest may be cause for removal. The interests of that Planning Commission member may be represented before the Commission by agent or legal representative at the public hearing, regular meeting, or work session and entered into the public record.

Article 13:

Changes Affecting the General Plan

Anytime the Planning Commission would make a decision affecting the General Plan, it is the Planning Commission's intent to hold a public hearing.

Article 14:

Adoption and Amendment of Bylaws

A. Bylaw adoption, or amendment, shall be made by the Planning Commission following review by the Commission's legal counsel and a public hearing.

B. The Planning Commission bylaws shall be adopted or amended upon a vote of a majority plus one of the appointed members. Such shall take affect immediately after a successful vote to adopt or amend.

Article 15:

The Planning Commission complies with current statutory requirements of the public and open meetings act.